316300-4 ✔ ACTIVE

MAG-MATE | MAG-MATE 300

TE Internal #: 316300-4

Magnet Wire Terminals, Poke-In, Mating Tab Width .187 in [4.75 mm], Size 1, Lead Wire Size 20 - 18 AWG, Lead Wire Size .5 - .8 mm², MAG-MATE 300

View on TE.com >

Terminals & Splices > Magnet Wire Terminals

Magnet Wire Terminal Type: **Poke-In**

Mating Tab Width: **4.75 mm [.187 in]**

Mating Tab Thickness: **.5 mm [.02 in]**

Compatible With Cavity Size: **Size 1**

Lead Wire Size: **20 - 18 AWG**

Features

Product Type Features

Compatible With Discrete Wire Type	Magnet Wire, Solid

Configuration Features

Strip Orientation	Side Feed

Body Features

Compatible With Cavity Size	Size 1

Contact Features

Magnet Wire Terminal Type	Poke-In
Mating Tab Width	4.75 mm[.187 in]
Mating Tab Thickness	.5 mm[.02 in]
Terminal Plating Material	Tin
Contact Underplating Material	Nickel
Terminal Orientation	Straight

Termination Features

Termination Method to Wire & Cable	Insulation Displacement (IDC)

Mechanical Attachment

Mating Retention Type	Hole

Dimensions

Terminal Height	7.62 mm[.3 in]
Lead Wire Size	.5 - .8 mm²
Magnet Wire Size	.35 - .63 mm
Stock Thickness (Magnet Wire Side)	.41 mm[.016 in]
Product Length	27.75 mm[1.029 in]

Usage Conditions

Insulation Option	Uninsulated
Operating Temperature Range	-20 - 105 °C[-4 - 221 °F]

Operation/Application

Compatible With Wire Base Material	Copper

Identification Marking

Identification Number	10

Packaging Features

Packaging Quantity	8000
Packaging Method	Reel, Reel/Carton

Product Compliance

For compliance documentation, visit the product page on TE.com>

EU RoHS Directive 2011/65/EU	Compliant
EU ELV Directive 2000/53/EC	Compliant
China RoHS 2 Directive MIIT Order No 32, 2016	No Restricted Materials Above Threshold
EU REACH Regulation (EC) No. 1907/2006	Current ECHA Candidate List: JAN 2024 (240) Candidate List Declared Against: JAN 2024 (240) Does not contain REACH SVHC
Halogen Content	Low Halogen - Br, Cl, F, I < 900 ppm per homogenous material. Also BFR/CFR/PVC Free
Solder Process Capability	Not applicable for solder process capability

Product Compliance Disclaimer

This information is provided based on reasonable inquiry of our suppliers and represents our current actual knowledge based on the information they provided. This information is subject to change. The part numbers that TE has identified as EU RoHS compliant have a maximum concentration of 0.1% by weight in homogenous materials for lead, hexavalent chromium, mercury, PBB, PBDE, DBP, BBP, DEHP, DIBP, and 0.01% for cadmium, or qualify for an exemption to these limits as defined in the Annexes of Directive 2011/65/EU (RoHS2). Finished electrical and electronic equipment products will be CE marked as required by Directive 2011/65/EU. Components may not be CE marked. Additionally, the part numbers that TE has identified as EU ELV compliant have a maximum concentration of 0.1% by weight in homogenous materials for lead, hexavalent chromium, and mercury, and 0.01% for cadmium, or qualify for an exemption to these limits as defined in the Annexes of Directive 2000/53/EC (ELV). Regarding the REACH Regulation, the information TE provides on SVHC in articles for this part number is based on the latest European Chemicals Agency (ECHA) 'Guidance on requirements for substances in articles' posted at this URL: https://echa.europa.eu/guidance-documents/guidance-on-reach

Compatible Parts

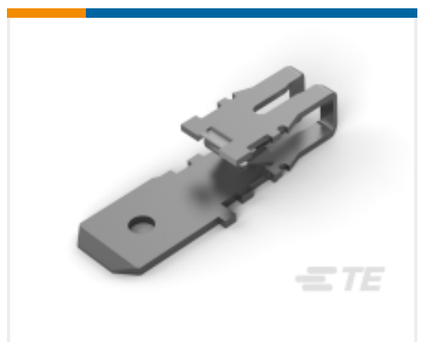

TE Part # 6-316300-7
STD MAG-MATE POKE-IN WITH .187

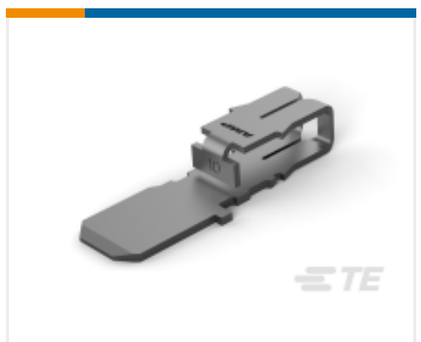

TE Part # 62514-1
MAG-MATE 27-23 187 F TAB TPBR

TE Part # 63585-1
MAG-MATE 27-23 187 F TAB TPBR

TE Part # 316300-5
STD MAG-MATE .187 POKE-IN TAB

TE Part # 2-316300-8
STD MAG-MATE POKE-IN WITH 187T

TE Part # 2-316300-9
STD MAG-MATE POKE-IN WITH 187T

TE Part # 2825382-1
STD MAG-MATE .187 POKE-IN TAB

TE Part # 316300-6
STD MAG-MATE .187 POKE-IN TAB

TE Part # 62514-2
MAG-MATE 27-23 187 F TAB TPBR

TE Part # 2-316300-7
STD MAG-MATE POKE-IN WITH 187T

Also in the Series | MAG-MATE 300

Magnet Wire Terminals(78)

Customers Also Bought

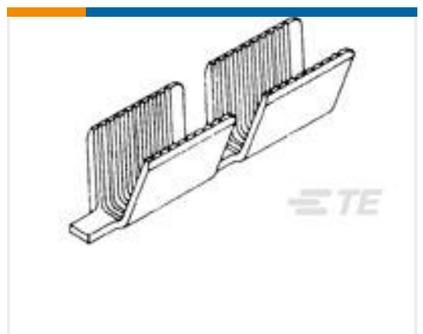

TE Part # 62304-2
AMVAR SPLC 600-3000 020TPBR

TE Part # 179846-6
AMP POWER D/LOCK T/HDR ASSY 3P

TE Part # 2-1971906-2
HEADER ASSY 4POS,KEYING-B,NEW GIC3.3

TE Part # 1601046-2
WIRE2WIRE,STD,SMZ

TE Part # 1-1376421-2
10mm B-T-W Conn. 2P HDR ASSEMB

TE Part # 5-1123824-1
EP CONN HDR ASSY 1P BLACK

TE Part # 1-1971906-2
HEADER ASSY 4POS,KEYING-A,NEW GIC3.3

TE Part # 5-1971906-3
HEADER ASSY 6POS,KEYING-A,NEW GIC3.3

Documents

Product Drawings

STD MAG-MATE .187 POKE-IN TAB

English

CAD Files

3D PDF

3D

Customer View Model

ENG_CVM_CVM_316300-4_N_c-316300-4-n.2d_dxf.zip

English

Customer View Model

ENG_CVM_CVM_316300-4_N_c-316300-4-n.3d_igs.zip

English

Customer View Model

ENG_CVM_CVM_316300-4_N_c-316300-4-n.3d_stp.zip

English

By downloading the CAD file I accept and agree to the Terms and Conditions of use.

Datasheets & Catalog Pages

Magnet Wire Terminals & Splices

English

Product Specifications

Application Specification

English

STD MAG-MATE Poke-in with 187 Tab Terminal

English

Instruction Sheets

MANUAL PRESS FOR MAG-MATE(911979-9)

Japanese

Instruction Sheet (non U.S.)

Japanese

Agency Approvals

UL Report

English