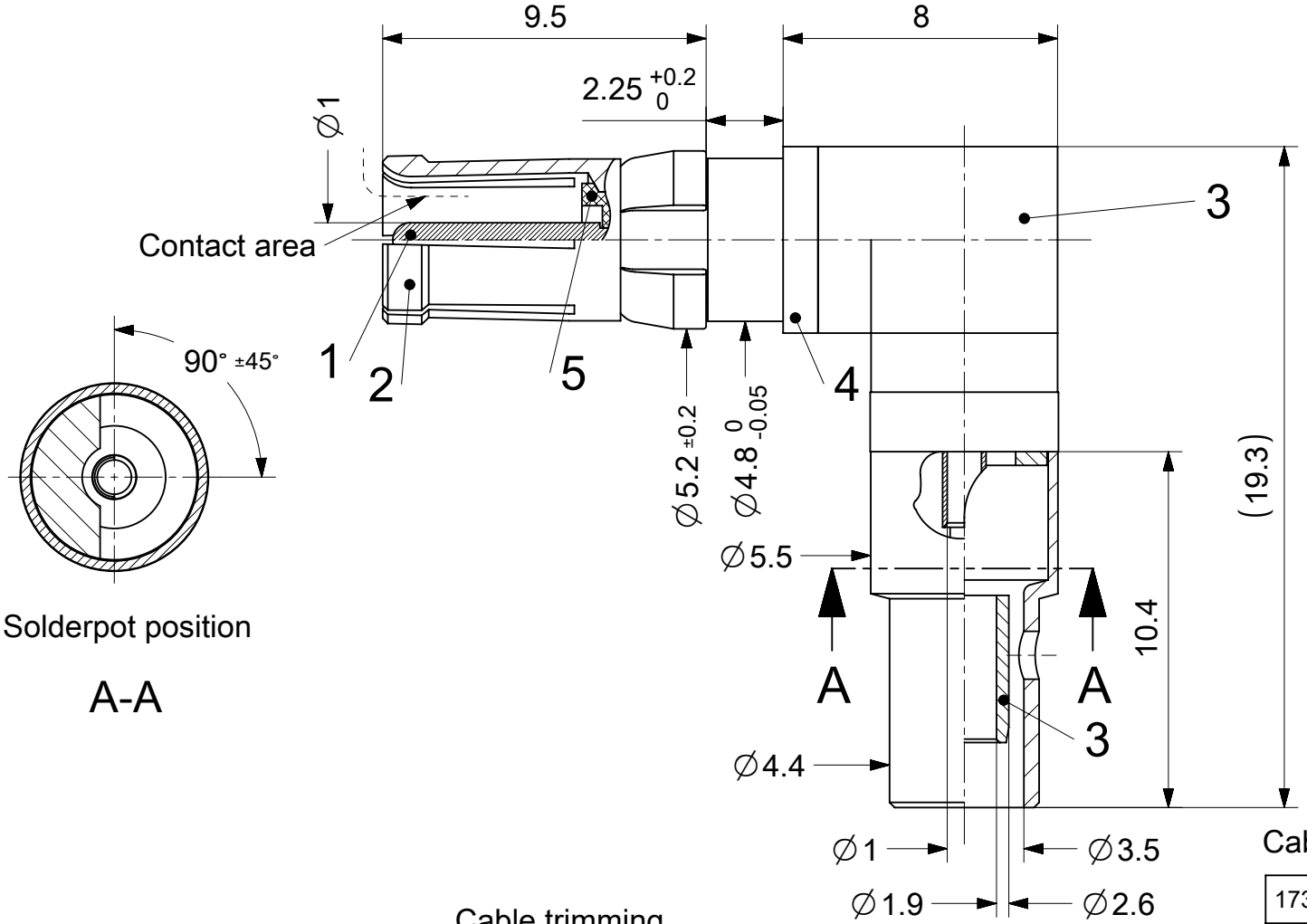

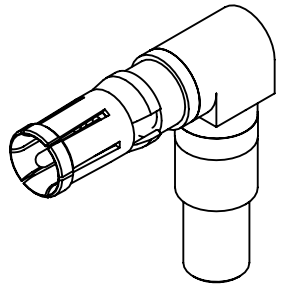

2:1

RoHS compliant
by exemption

Cable RG316U double braided

1731120177	FMX032S102	102
Material Number	FCT Part Number	Material + Finish See extra sheet

Crimping tools:

Crimping of outer conductor:

Hand tool: 1731121732
Die: 1731121735 cavity B

Pneumatic crimp tool: HX23
(replacement for PH4001)

Extraction tool: 1731121747

Cable trimming dimensions

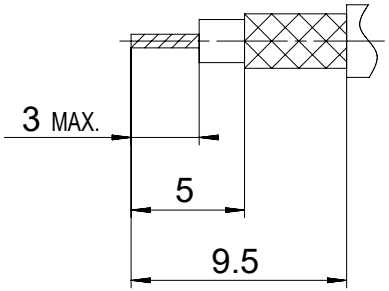

UNLESS OTHERWISE SPECIFIED DIMENSIONS FOR REFERENCE ONLY

REPLACEMENT FOR DOCUMENT NUMBER: FMX032S

THIS DRAWING CONTAINS INFORMATION THAT IS PROPRIETARY TO MOLEX ELECTRONIC TECHNOLOGIES, LLC AND SHOULD NOT BE USED WITHOUT WRITTEN PERMISSION

FUNCTIONAL SYMBOLS
FA = 0
FC = 0
FP = 0

DIVISIONAL SYMBOLS

DIMENSION UNITS	SCALE
mm	5:1

GENERAL TOLERANCES (UNLESS SPECIFIED)	
ANGULAR TOL	± °
4 PLACES	±
3 PLACES	±
2 PLACES	±
1 PLACE	±
0 PLACES	±

DRAFT WHERE APPLICABLE MUST REMAIN WITHIN DIMENSIONS

CURRENT REV DESC:

EC NO: 710219
DRWN: VLOKESHA 2021/04/26
CHK'D: MTEUBEL 2022/06/22
APPR: MTEUBEL 2022/06/22

INITIAL REVISION:
DRWN: VLOKESHA 2021/04/26
APPR: MTEUBEL 2022/06/22

FIRST ANGLE PROJECTION

DRAWING	SERIES
A4-SIZE	173112

molex

FCT 50 OHM COAXIAL CONTACT
FOR D-SUB

PRODUCT CUSTOMER DRAWING

DOCUMENT NUMBER	DOC TYPE	DOC PART	REVISION
1731120177	PSD	000	A

MATERIAL NUMBER	CUSTOMER	SHEET NUMBER
SEE TABLE	GENERAL MARKET	1 OF 1

DOCUMENT STATUS	P1	RELEASE DATE	2022/06/22 10:22:29

FORMAT: master-tb-prod-A4
REVISION: J
DATE: 2020/01/14