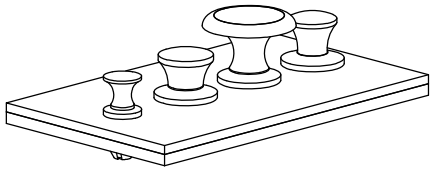

GROMMET NO.	GROMMET DASH NO.	"W"±.012 [0.3]	"H"±.008 [0.2]	"L" REF	"T" MAX	"T1" MAX	"DR" REMOVABLE PANEL HOLE DIA. RANGE	"DF" FIXED PANEL HOLE DIA. RANGE	MATING PLUNGER	ALTERNATE MATING PLUNGER NO.	PLUNGER DASH NO.
SLG	1L	.425 [10.8]	.079 [2]	.354 [9]	.063 [1.6]	.079-.165 [2-4.2]	.295-.303 [7.5-7.7]	.315-.323 [8-8.2]	SLPL	SLPB	1L
	2L			.394 [10]	.098 [2.5]	.118-.205 [3-5.2]					2L
	1M	.335 [8.5]	.071 [1.8]	.315 [8]	.043 [1.1]	.059-.146 [1.5-3.7]	.234-.240 [5.95-6.1]	.250-.256 [6.35-6.5]	SLPB	----	1M
	2M			.335 [8.5]	.063 [1.6]	.079-.165 [2-4.2]					2M
	3M			.374 [9.5]	.098 [2.5]	.118-.272 [3-5.2]					3M
	1S	.256 [6.5]	.047 [1.2]	.299 [7.6]	.039 [1]	.079-.158 [2-4]	.177-.181 [4.5-4.6]	.185-.189 [4.7-4.8]			1S
	2S			.319 [8.1]	.059 [1.5]	.098-.177 [2.5-4.5]					2S

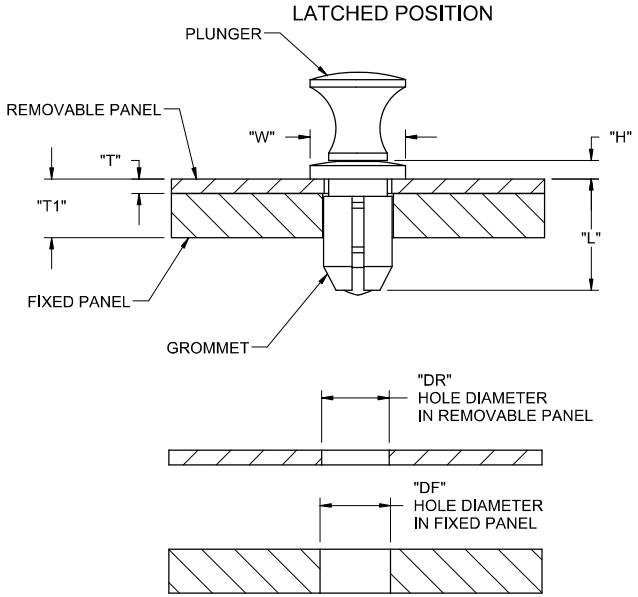

PLUNGER STYLES

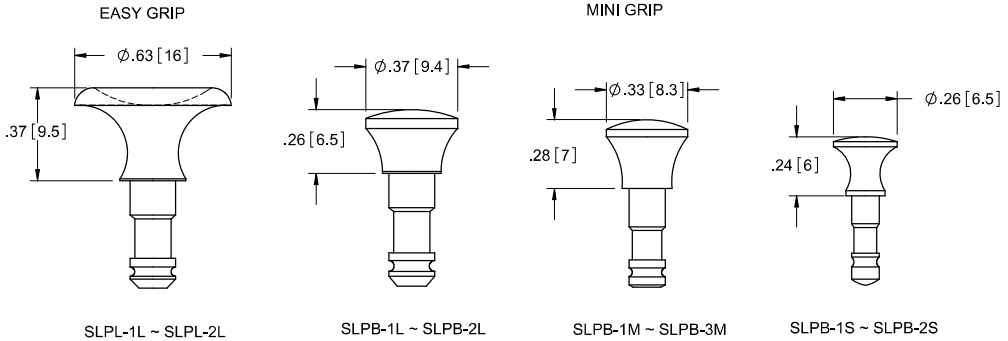

NOTES:
1. PLUNGER MATERIAL: NYLON 6, (RMS-120).
   SLPB-2M MATERIAL: NYLON 6 (RMS-52)
2. GROMMET MATERIAL: POLYCARBONATE, (RMS-72).
3. COLOR: BLACK OR WHITE; ADD SUFFIX "-B" OR "-W" TO PART NO.

REV.	DESCRIPTION	ENGR.	DATE
O	SEE CO 200747 FOR CHANGES	SK	01/12/2012
N	SEE CO 200725 FOR CHANGES	SK	10/11/11
M	SEE CO 200724 FOR CHANGES	SK	10/11/11
L	SEE CO 200604 FOR CHANGES	SK	12/01/10
K	SEE CO 200302 FOR CHANGES	SK	01/06/09
J	SEE CO 200187 FOR CHANGES	S.K.	05/21/08
I	SEE ECN #1157 FOR CHANGES	SJ	4/25/06
H	SEE ECN #944 FOR CHANGES	SK	02/22/05
-	SEE ENG. FOR REVISIONS A-G	-	---

TITLE: SNAP LATCH

DWG IN IN [MM]

CREATED USING SOLIDWORKS

TOLERANCES UNLESS NOTED
.XX=±.01
.XXX=±.005
FRAC.=±1/64
ANG.=±1°

FILE #: SL | DWN: SK | APP: SK | FINAL

SHEET: 1 OF 1 | SHEET SIZE: B | DT: 02/22/05 | CHKD: RDG

RE: RICHCO, INC.

RICHCO, INC.
ENG@RICHCO-INC.COM
(773) 539-4060

PART # SEE TABLE

PRINT TYPE CA