323168 ✔ ACTIVE

SOLISTRAND

TE Internal #: 323168

Closed Ring Tongue Terminal, 8 AWG, 3/8 Stud Size, 9.91 mm [.39 in] Stud Diameter, Closed Barrel, Straight, Nickel, Uninsulated

View on TE.com >

Terminals & Splices > Ring Terminals

Ring Terminal Product Type: **Closed Ring Tongue Terminal**

Wire Size: **13100 - 20800 CMA**

Stud Size: **3/8**

Features

Product Type Features

Ring Terminal Product Type	Closed Ring Tongue Terminal
Stud Size	3/8
Sealable	No
Wire Insulation Support Retention Type	Non-Insulation Support

Configuration Features

Number of Holes	1

Body Features

Product Weight	3.616 g

Contact Features

Barrel Type	Closed
Terminal Orientation	Straight
Terminal Plating Material	Nickel

Mechanical Attachment

Wire Insulation Support	Without

Dimensions

Wire Size	13100 - 20800 CMA
Stud Diameter	9.91 mm[.39 in]
Tongue Thickness	.79 mm[.031 in]
Product Length	29.67 mm[1.168 in]
Barrel Inside Diameter	4.37 mm[.172 in]

Usage Conditions

Insulation Option	Uninsulated
Operating Temperature Range	343 °C[649 °F]

Industry Standards

Government Qualified Terminal	No

Packaging Features

Packaging Quantity	500
Packaging Method	Loose Piece

Product Compliance

For compliance documentation, visit the product page on TE.com>

EU RoHS Directive 2011/65/EU	Compliant
EU ELV Directive 2000/53/EC	Compliant
China RoHS 2 Directive MIIT Order No 32, 2016	No Restricted Materials Above Threshold
EU REACH Regulation (EC) No. 1907/2006	Current ECHA Candidate List: JAN 2024 (240) Candidate List Declared Against: JAN 2024 (240) Does not contain REACH SVHC
Halogen Content	Low Halogen - Br, Cl, F, I < 900 ppm per homogenous material. Also BFR/CFR/PVC Free
Solder Process Capability	Not applicable for solder process capability

Product Compliance Disclaimer

This information is provided based on reasonable inquiry of our suppliers and represents our current actual knowledge based on the information they provided. This information is subject to change. The part numbers that TE has identified as EU RoHS compliant have a maximum concentration of 0.1% by weight in homogenous materials for lead, hexavalent chromium, mercury, PBB, PBDE, DBP, BBP, DEHP, DIBP, and 0.01% for cadmium, or qualify for an exemption to these limits as defined in the Annexes of Directive 2011/65/EU (RoHS2). Finished electrical and electronic equipment products will be CE marked as required by Directive 2011/65/EU. Components may not be CE marked. Additionally, the part numbers that TE has identified as EU ELV compliant have a maximum concentration of 0.1% by weight in homogenous materials for lead, hexavalent chromium, and mercury, and 0.01% for cadmium, or qualify for an exemption to these limits as defined in the Annexes of Directive 2000/53/EC (ELV). Regarding the REACH Regulation, the information TE provides on SVHC in articles for this part number is based on the latest European Chemicals Agency (ECHA) 'Guidance on

requirements for substances in articles' posted at this URL: https://echa.europa.eu/guidance-documents/guidance-on-reach

Compatible Parts

TE Part # 69355
HHHT SOLIS SOLIS FLAG STRATO 8 ASSY

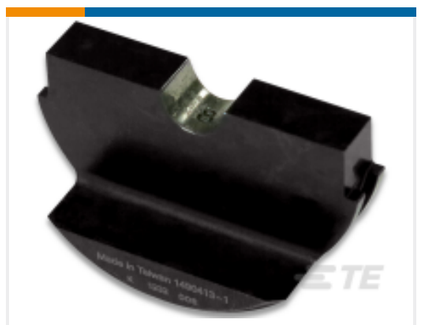

TE Part # 1490413-1
HYP10 SOLIS 8AWG NEST

TE Part # 1490414-1
HYP10 SOLIS 8AWG INDENTER

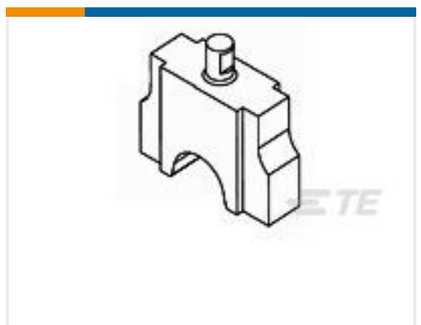

TE Part # 1901001-1
NEST #8

TE Part # 48355
HYP8 SOLIS 8AWG INDENTER

TE Part # 69216
HYP8/10 SOLIS 8AWG DIE SET

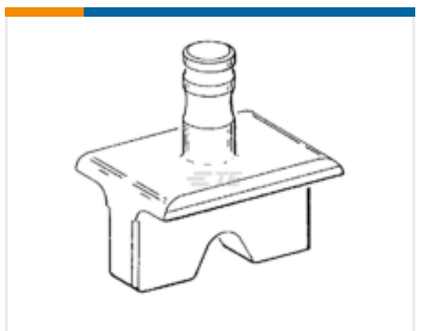

TE Part # 48126
HYP8 SOLIS 8AWG NEST

TE Part # 69339
HHHT SOLIS SOLIS FLAG STRATO 8 ASSY

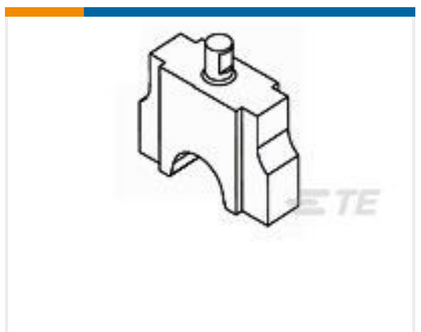

TE Part # 1901002-2
INDENTER, SOLISTRAND

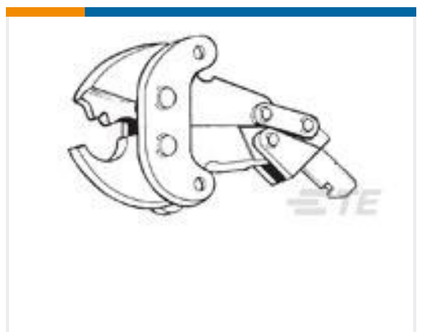

TE Part # 49956
PNEUMATIC SOLIS STRATO 8 HEAD

Customers Also Bought

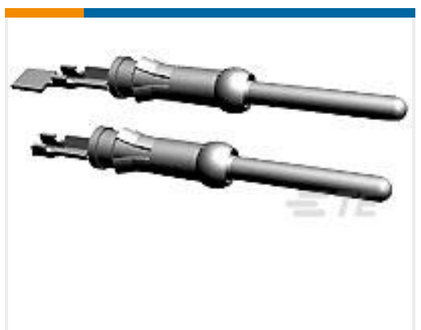

TE Part # 1-66103-5
III+ PIN,24-20,TIN-LEAD,SMPACK

TE Part # 323175
TERMINAL,SOLIS R HR 4 3/8

TE Part # DT04-08PA-C015
REC, 8P, GRY, E, A

TE Part # 1991253-9
9 WAY LOW COST D SUB BACKSHELL

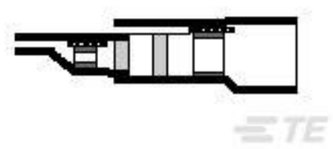

TE Part # 284303-000

B-020-22-N

TE Part # CTM-22

JUNCTION ASSY

TE Part # ZPF000000000015067

DM 5623-37-37 PP

TE Part # 1-1904045-1

V23333Z0001A007-EV-100

TE Part # ZPF000000000015872

DTP 07-20-41 K

Documents

Product Drawings

TERMINAL,SOLIS R HR 8 3/8

English

CAD Files

Customer View Model

ENG_CVM_CVM_323168_L.2d_dxf.zip

English

3D PDF

3D

Customer View Model

ENG_CVM_CVM_323168_L.3d_igs.zip

English

Customer View Model

ENG_CVM_CVM_323168_L.3d_stp.zip

English

By downloading the CAD file I accept and agree to the Terms and Conditionsof use.

Datasheets & Catalog Pages

STRATO-THERM Terminals & Splices for High Temperature Applications

English

Product Specifications

Product Specification

English