63658-1 ✔ ACTIVE

MAG-MATE | MAG-MATE 300

TE Internal #: 63658-1

Magnet Wire Terminals, Poke-In, Size 2, .57 - .72 mm Aluminum Wire, Lead Wire Size 20 - 18 AWG, Lead Wire Size .5 - .9 mm², MAG-MATE 300

View on TE.com >

Terminals & Splices > Magnet Wire Terminals

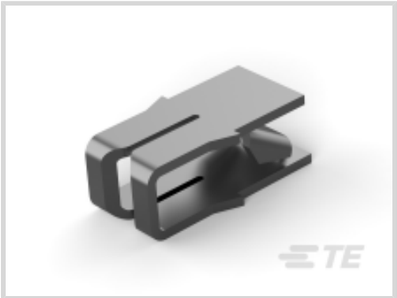

Magnet Wire Terminal Type: **Poke-In**

Compatible With Cavity Size: **Size 2**

Aluminum Wire Size: **.57 - .72 mm**

Lead Wire Size: **.5 - .9 mm²**

Features

Product Type Features

Compatible With Discrete Wire Type	Magnet Wire, Solid

Body Features

Compatible With Cavity Size	Size 2

Contact Features

Magnet Wire Terminal Type	Poke-In
Terminal Plating Material	Tin
Terminal Orientation	Twisted

Termination Features

Termination Method to Wire & Cable	Insulation Displacement (IDC)

Mechanical Attachment

Mating Retention Type	Locking

Dimensions

Terminal Height	7.62 mm[.3 in]
Aluminum Wire Size	.57 - .72 mm

Lead Wire Size	.5 - .9 mm²
Magnet Wire Size	.45 - .64 mm
Stock Thickness (Magnet Wire Side)	.41 mm[.016 in]
Product Length	7.87 mm[.31 in]

Usage Conditions

Insulation Option	Uninsulated
Operating Temperature Range	-65 - 150 °C[-85 - 302 °F]

Operation/Application

Compatible With Wire Base Material	Aluminum, Copper

Identification Marking

Identification Number	12

Packaging Features

Packaging Quantity	12000
Packaging Method	Reel, Reel/Carton

Product Compliance

For compliance documentation, visit the product page on TE.com>

EU RoHS Directive 2011/65/EU	Compliant
EU ELV Directive 2000/53/EC	Compliant
China RoHS 2 Directive MIIT Order No 32, 2016	No Restricted Materials Above Threshold
EU REACH Regulation (EC) No. 1907/2006	Current ECHA Candidate List: JAN 2024 (240) Candidate List Declared Against: JAN 2024 (240) Does not contain REACH SVHC
Halogen Content	Low Halogen - Br, Cl, F, I < 900 ppm per homogenous material. Also BFR/CFR/PVC Free
Solder Process Capability	Not applicable for solder process capability

Product Compliance Disclaimer

This information is provided based on reasonable inquiry of our suppliers and represents our current actual knowledge based on the information they provided. This information is subject to change. The part numbers that TE has identified as EU RoHS compliant have a maximum concentration of 0.1% by weight in homogenous materials for lead, hexavalent chromium, mercury, PBB, PBDE, DBP, BBP, DEHP, DIBP, and 0.01% for cadmium, or qualify for an exemption to these limits as defined in the Annexes of Directive 2011/65/EU (RoHS2). Finished electrical and electronic equipment products will be CE marked as required by Directive 2011/65/EU. Components may not be CE marked. Additionally, the part numbers that TE has identified as EU ELV compliant have a maximum concentration of 0.1% by weight in homogenous materials for lead, hexavalent chromium, and mercury, and 0.01% for cadmium, or qualify for an exemption to these limits

as defined in the Annexes of Directive 2000/53/EC (ELV). Regarding the REACH Regulation, the information TE provides on SVHC in articles for this part number is based on the latest European Chemicals Agency (ECHA) 'Guidance on requirements for substances in articles' posted at this URL: https://echa.europa.eu/guidance-documents/guidance-on-reach

Compatible Parts

TE Part # 1217234-1
MAG-MATE TERM 28-31 013TPBR

TE Part # 63632-1
MAG-MATE TRI SLOT 016TPBR

TE Part # 62833-1
MAG-MATE POKE-IN TERM 016TPBR

TE Part # 63591-1
MAG-MATE TERM #20 016TPBR

TE Part # 1217082-1
TERM MAG-MATE 25-22 016 TPPHBZ

TE Part # 63662-1
MAG-MATE TERM 33-34 010TPBR

TE Part # 63861-1
TERM, MAG-MATE 27-24 016TPPHBZ

TE Part # 1217973-2
TERM,SPLICE,MAG-MATE

TE Part # 62833-2
MAG-MATE POKE-IN TERM 016TPBR

TE Part # 62833-4
TERMINAL,POKE-IN,MAG-MATE

TE Part # 62912-1
MAG-MATE POKE-IN 016 TPBR

TE Part # 63658-2
MAG-MATE TERM 25-22 016 TPBR

TE Part # 63658-7
MAG-MATE TERM 25-22 016 TPBR

TE Part # 63789-1
TERMINAL MAG-MATE POKE-IN TPBR

TE Part # 63044-1
MAG-MATE TERM 27-23 016 TPBR

TE Part # 1217209-1
TERM SPL TRISLOT 300 MTA MAG

TE Part # 1217757-1
TERM,POKE-IN,LP, MAG-MATE

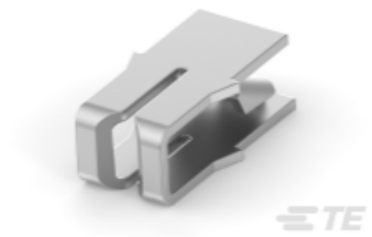

TE Part # 62841-1
MAG-MATE TERM 20-22 016 TPBR

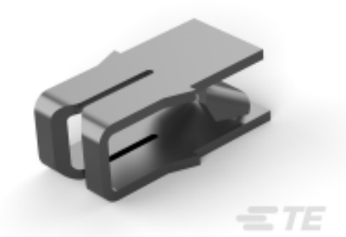

TE Part # 63658-3
MAG MATE TERM 25-22 016TPBR

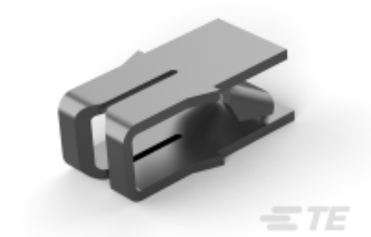

TE Part # 63658-5
TERM,POKE-IN,MAG-MATE

Also in the Series | MAG-MATE 300

Magnet Wire Terminals(78)

Customers Also Bought

TE Part # 2310133-1
MULTI 6P CONNECTOR

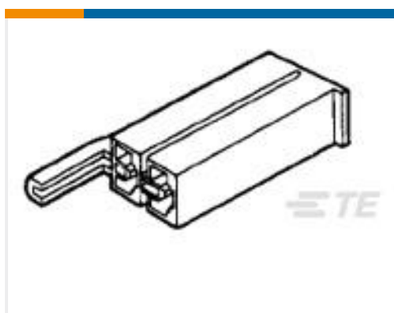

TE Part # 174587-1
PL 187 (4.8 MM) HOUSING RECEPTACLE

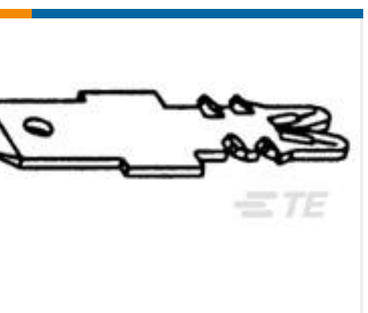

TE Part # 1601013-1
131-057-000=TAB,187X020,STDSMZ

TE Part # 2161678-2
CABLE, POWER, ADJUST MOTOR

TE Part # 2825663-1
MAG-MATE W/250 CONN TAB TPBR

TE Part # 3-1971883-1
4P HOUSING(HIGH VOLTAGE) MULTI 6P CONN

TE Part # 3-1983663-1
REC. CONTACT MULTI 6P CONNECTOR

TE Part # 3-1983666-1
2 POS DOUBLE LOCK PLATE MULTI 6P CONNEC

Documents

Product Drawings

MAG MATE TERM 25-22 016TPBR

English

CAD Files

3D PDF

3D

Customer View Model

ENG_CVM_CVM_63658-1_Z.2d_dxf.zip

English

Customer View Model

ENG_CVM_CVM_63658-1_Z.3d_igs.zip

English

Customer View Model

ENG_CVM_CVM_63658-1_Z.3d_stp.zip

English

By downloading the CAD file I accept and agree to the Terms and Conditionsof use.

Datasheets & Catalog Pages

Magnet Wire Terminals & Splices

English

Product Specifications

Application Specification

English