62305-2 ✔ ACTIVE

AMPLIVAR

TE Internal #: 62305-2

Splices, Pigtail Splice, 22 - 15 AWG Wire Size, .3 - 1.5 mm² Wire Size, Splice Capacity 3, Serrated, 600 - 3000 CMA Wire Size, Brass, AMPLIVAR

View on TE.com >

Terminals & Splices > Splices

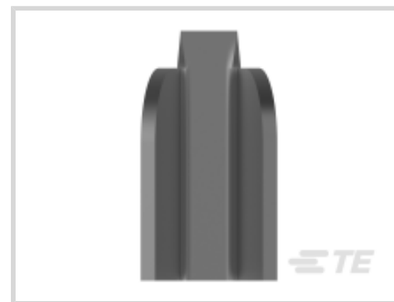

Splice Type: **Pigtail Splice**

Wire Size: **.3 - 1.5 mm²**

Sealable: **No**

Splice Capacity: **3**

Features

Product Type Features

Splice Type	Pigtail Splice
Sealable	No
Compatible With Discrete Wire Type	Magnet Wire, Solid

Configuration Features

Strip Orientation	End Feed
Splice Capacity	3
Number of Serrations	9

Electrical Characteristics

Operating Voltage	250 V

Body Features

Product Weight	.181 g
Splice Features	Serrated

Contact Features

Terminal Plating Material	Tin

Contact Base Material	Brass
Barrel Type	Open

Termination Features

Crimp Width	2.79 mm[.11 in]

Mechanical Attachment

Wire Insulation Support	Without

Dimensions

Wire Size	600 - 3000 CMA
Terminal Material Thickness	.41 mm[.016 in]
Product Length	5.72 mm[.225 in]

Usage Conditions

Insulation Option	Uninsulated
Operating Temperature Range	-65 - 150 °C[-85 - 302 °F]

Operation/Application

Compatible With Wire Base Material	Copper

Industry Standards

Government Qualified Splice	No

Packaging Features

Packaging Quantity	30000
Packaging Method	Strip

Product Compliance

For compliance documentation, visit the product page on TE.com>

EU RoHS Directive 2011/65/EU	Compliant
EU ELV Directive 2000/53/EC	Compliant
China RoHS 2 Directive MIIT Order No 32, 2016	No Restricted Materials Above Threshold
EU REACH Regulation (EC) No. 1907/2006	Current ECHA Candidate List: JAN 2024 (240) Candidate List Declared Against: JAN 2024 (240) Does not contain REACH SVHC
Halogen Content	Low Halogen - Br, Cl, F, I < 900 ppm per homogenous material. Also BFR/CFR/PVC Free

Solder Process Capability

Not applicable for solder process capability

Product Compliance Disclaimer

This information is provided based on reasonable inquiry of our suppliers and represents our current actual knowledge based on the information they provided. This information is subject to change. The part numbers that TE has identified as EU RoHS compliant have a maximum concentration of 0.1% by weight in homogenous materials for lead, hexavalent chromium, mercury, PBB, PBDE, DBP, BBP, DEHP, DIBP, and 0.01% for cadmium, or qualify for an exemption to these limits as defined in the Annexes of Directive 2011/65/EU (RoHS2). Finished electrical and electronic equipment products will be CE marked as required by Directive 2011/65/EU. Components may not be CE marked. Additionally, the part numbers that TE has identified as EU ELV compliant have a maximum concentration of 0.1% by weight in homogenous materials for lead, hexavalent chromium, and mercury, and 0.01% for cadmium, or qualify for an exemption to these limits as defined in the Annexes of Directive 2000/53/EC (ELV). Regarding the REACH Regulation, the information TE provides on SVHC in articles for this part number is based on the latest European Chemicals Agency (ECHA) 'Guidance on requirements for substances in articles' posted at this URL: https://echa.europa.eu/guidance-documents/guidance-on-reach

Compatible Parts

TE Part # 62194-2
MIN AMVAR SPLC 016TPBR

TE Part # 737060-2
AMPLIVAR SPL 5 SERR W/INS SUP

TE Part # 1-2161800-2
APT-5A TERMINATING MACHINE

TE Part # 1-2161800-6
APT 5A

TE Part # 1-2161900-2
APT-5E TERMINATING MACHINE

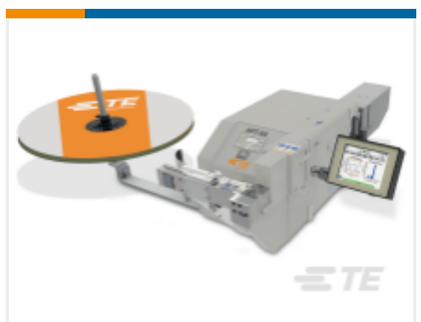

TE Part # 1-2326135-2
APT-5A INFINITE SPLICE

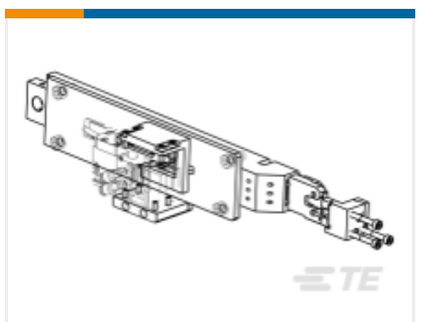

TE Part # 1-2326143-2
RETROFIT KIT, INFINITE SPLICE

TE Part # 1-2326145-2
APT-5E INFINITE SPLICE

TE Part # 1742348-1
9 Serr AMPLIVAR Spade

TE Part # 2150117-2
OCEAN-2.0-APPLICATOR-E-110F-SEA

TE Part # 7-2150117-7
OCEAN_2.0_SPARE_PART_KIT-110F

TE Part # 1-2161900-6
APT 5E

TE Part # 1-2217600-2
APT-5A HF

TE Part # 1-2217600-6
APT-5A HF

TE Part # 1-2217700-2
APT 5E HF

TE Part # 1-2217700-6
APT 5E HF

Also in the Series | AMPLIVAR

Crimp Wire Pins, Tabs & Ferrules(5)

Magnet Wire Terminals(4)

PCB Terminals(1)

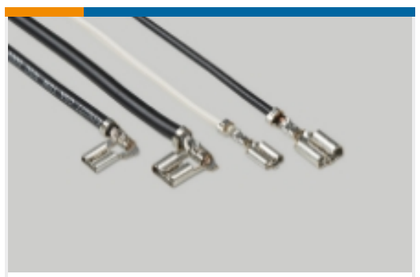

Quick Disconnects(40)

Ring Terminals(28)

Splices(77)

Customers Also Bought

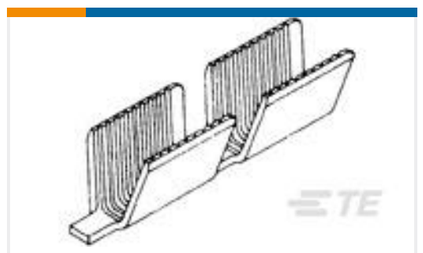

TE Part # 62303-2
AMVAR SPLC 400-1500 016TPBR

TE Part # 1534531-1
Signal Header

TE Part # 462006-6
FLOATING SHEAR

TE Part # 2-2188220-1
020/060 56P HDR ASSY(CODE A)

TE Part # 2315627-5
4POS,0.50,HDR ASSY,180DEG,COD E, HSL

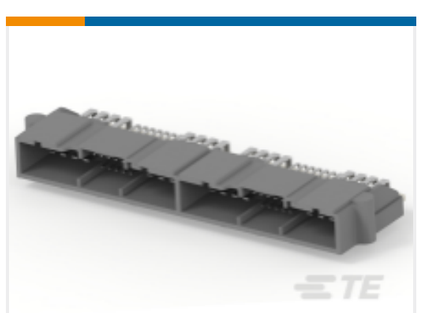

TE Part # 5-2188220-3
020/060 56P HDR ASSY(CODE D)

TE Part # 372687
COMPRESSION SPRING

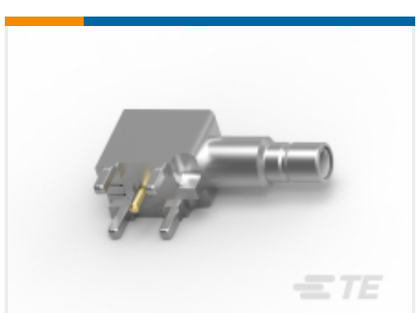

TE Part # 1274412-1
SMB PCB RIGHT ANGLE JACK

TE Part # 920-697-115
AV AM/FM/DAB/FZV Porsche

Documents

Product Drawings

AMVAR SPLC 600-3000 016TPBR

English

CAD Files

3D PDF

3D

Customer View Model

ENG_CVM_CVM_62305-2_N.2d_dxf.zip

English

Customer View Model

ENG_CVM_CVM_62305-2_N.3d_igs.zip

English

Customer View Model

ENG_CVM_CVM_62305-2_N.3d_stp.zip

English

By downloading the CAD file I accept and agree to the Terms and Conditionsof use.

Datasheets & Catalog Pages

1654742_HOUSEHOLD_APPLIANCES_RAST5

English

Magnet Wire Terminals & Splices

English

Product Specifications

Application Specification

English