MATERIAL NO.	ENGINEERING NO.	FINISHED LENGTH
1200490557	E11A06002M003	11.8IN (0.3M)
1201080032	E11A06002M450	147 FT 7.6 (45M)
1201080028	E11A06002M900	295FT 3.30 (90M)

PART NO. MATRIX

E11A06002M005

FINISHED LENGTH
M005= 0.5 METER
M010= 1 METER
M100= 10 METER

CABLE LENGTH TOLERANCES
<.3M [1FT]: +19mm-0 [+.75in-0]
.3 - .9M [1 - 3FT]: +44.5mm-0 [+1.75in-0]
.9 - 1.8M [3 - 6FT]: +55.6mm-0 [+2.19in-0]
1.8 - 3.7M [6 - 12FT: +88.9mm-0 [+3.50in-0]
3.7 - 7.3M [12 - 24FT]: +165.1mm-0 [+6.50in-0]
7.3-14.6M [24 - 48FT]: +317.5mm-0 [+12.50in-0]
14.6 - 30.5M [48-100FT]: +622.3mm-0 [+24.50in-0]
OVER 30M [100FT] +2% OF FINISHED LENGTH

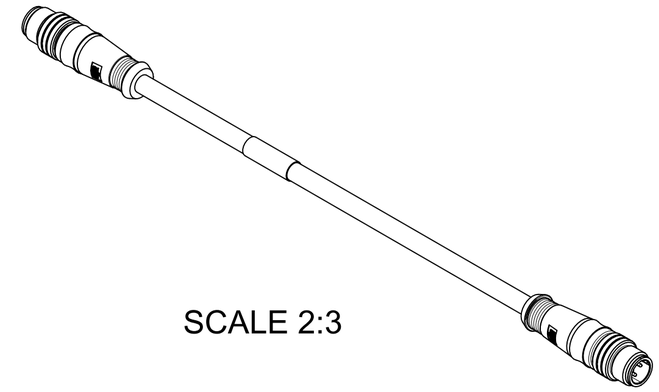

SCALE 2:3

NOTES:
1. MATERIAL: AS NOTED
2. FINISH: AS NOTED
3. ELECTRICAL SPECIFICATIONS
   VOLTAGE RATING: 125V
   CURRENT RATING: 1.5A
4. TEMP RANGE: -25°C TO +75°C
5. PROTECTION: IP67 (WHEN MATED)
6. UL FILE: E361772
7. ALL DIMS ARE FOR REFERNCE UNLESS TOLERNACED OR NOTED OTHERWISE

WIRING DIAGRAM

1	ORANGE/WHITE	1
2	BLUE/WHITE	2
3	ORANGE	3
4	BLUE	4

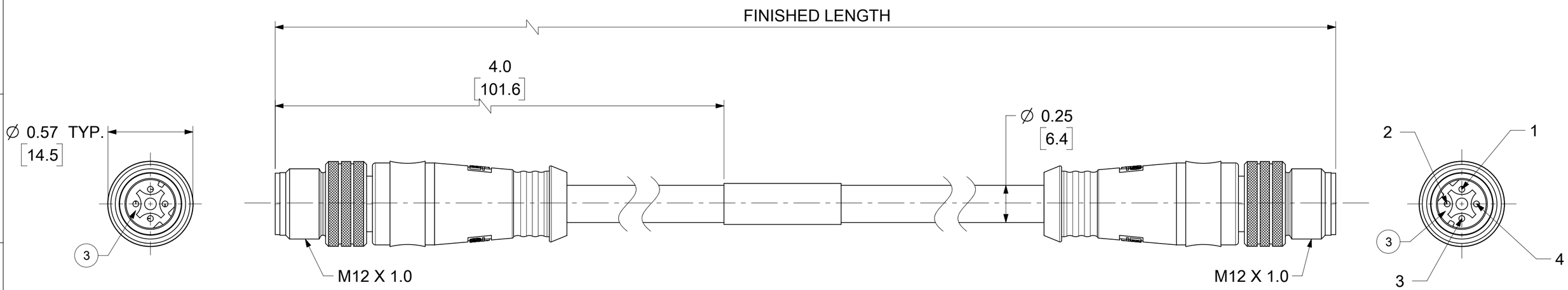

MALE FACE VIEW

MALE FACE VIEW

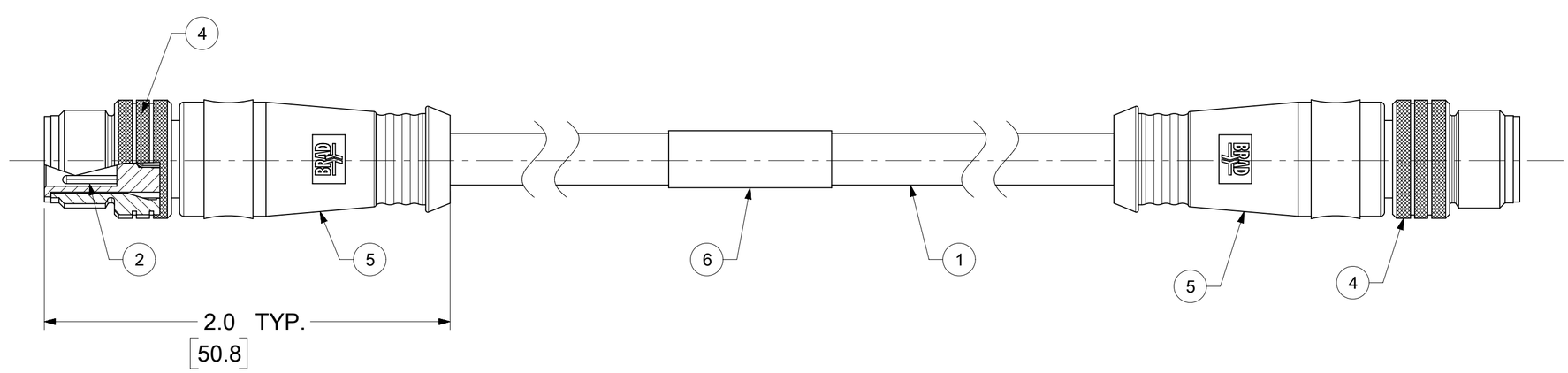

ITEM	DESCRIPTION	MATERIAL	FINISH
6	LABEL	VINYL	BLACK/WHITE
5	OVERMOLD	TPU	BLACK
4	M12 MALE COUPLING NUT	BRASS	NICKEL
3	M12 D-CODE 4P MALE INSERT	PUR	BLACK
2	CONTACT PIN	COPPER ALLOY	GOLD PLATED
1	CABLE, 24-4, ETHERNET	PVC JACKET	TEAL

DOCUMENT STATUS: P1 | RELEASE DATE: 2020/11/18 23:03:24

THIS DRAWING CONTAINS INFORMATION THAT IS PROPRIETARY TO MOLEX ELECTRONIC TECHNOLOGIES, LLC AND SHOULD NOT BE USED WITHOUT WRITTEN PERMISSION

FUNCTIONAL SYMBOLS: FA = 0, FC = 0, FP = 0
DIVISIONAL SYMBOLS

DIMENSION UNITS: INCH/MM
SCALE: 2:1
GENERAL TOLERANCES (UNLESS SPECIFIED)

	MM	INCH
4 PLACES	±	±
3 PLACES	±	±
2 PLACES	±	±
1 PLACE	±	±
0 PLACES	±	±
ANGULAR TOL	± °	

DRAFT WHERE APPLICABLE MUST REMAIN WITHIN DIMENSIONS

CURRENT REV DESC: INITIAL RELEASE

EC NO: 648668
DRWN: VBASUTHKARP 2020/09/25
CHK'D: RSTONE 2020/11/11
APPR: BWOODMAN 2020/11/18

INITIAL REVISION:
DRWN: NSTAUDIGEL 2010/02/08
APPR: fpacher 2010/02/11

THIRD ANGLE PROJECTION | DRAWING: C-SIZE | SERIES: 120049

molex

MICRO-CHANGE CORDSET, M12
4 POLE, MALE-MALE, STRAIGHT, D-CODE, 24/4
CAT-5E

PRODUCT CUSTOMER DRAWING

DOCUMENT NUMBER	DOC TYPE	DOC PART	REVISION
SD-120049-001	PSD	001	A

MATERIAL NUMBER	CUSTOMER	SHEET NUMBER
SEE TABLE	GENERAL MARKET	1 OF 1

FORMAT: Eng-lega-master-tb-prod-C
REVISION: E
DATE: 2020/1/14