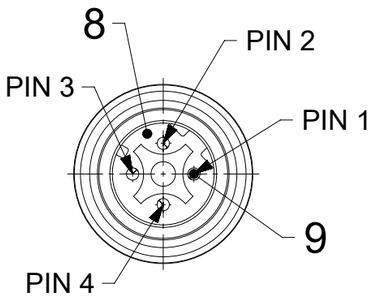

FRONT VIEW
SCALE 2:1

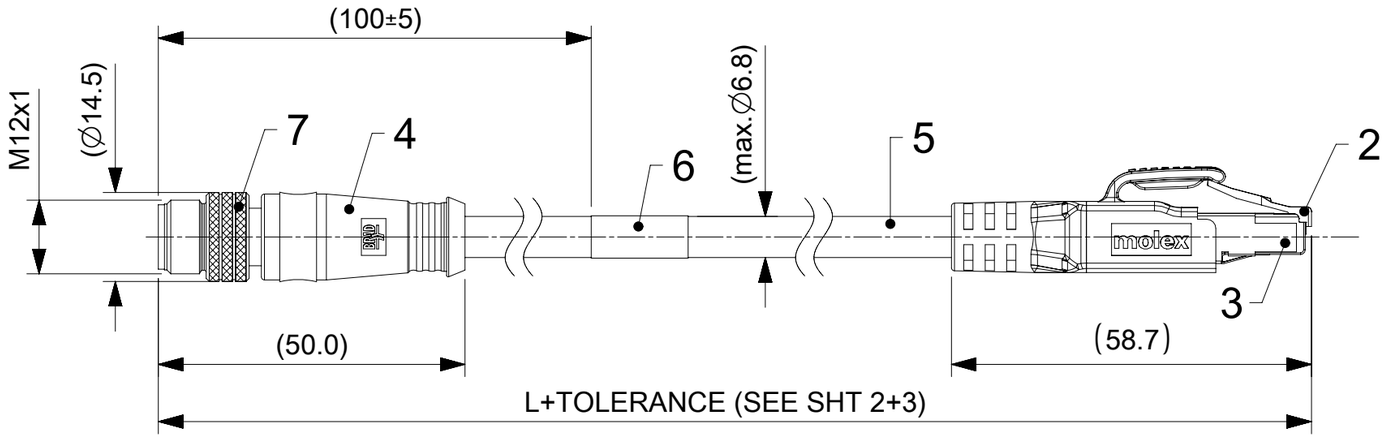

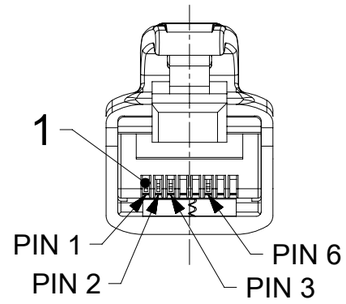

FRONT VIEW
SCALE 2:1

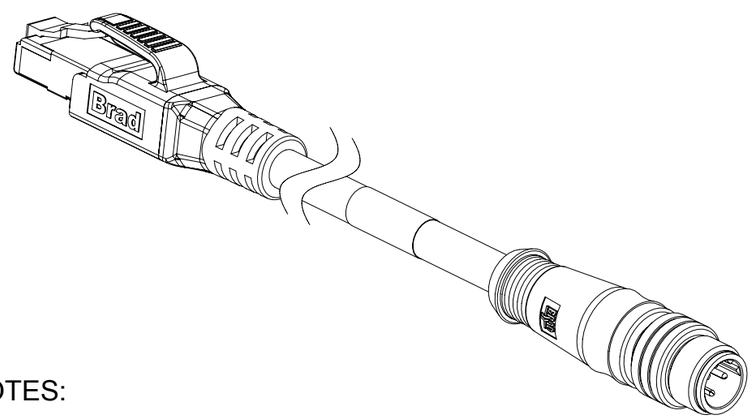

WIRING DIAGRAM

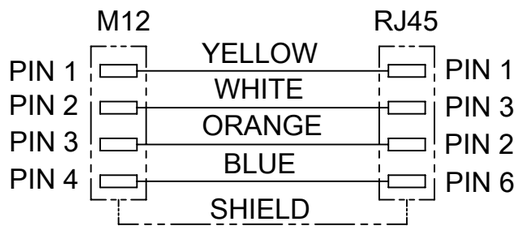

NOTES:

1. ELECTRICAL DATA:
   MAX. VOLTAGE RATING 60 VDC
   MAX. CURRENT PER CONTACT 1.5 A
2. ENVIRONMENTAL:
   OPERATING TEMPERATURE SEE SHEET 2
   INDEX OF PROTECTION RJ45: IP20
   INDEX OF PROTECTION M12: IP67
3. FOR MORE INFORMATION SEE PRODUCT SPECIFICATION 1201080202 PS P00

BOM

ITEM	QTY.	DESCRIPTION	MATERIAL	FINISH/COLOR
9	4	CONTACTS M12 MALE	BRASS	SELECTIVE GOLD
8	1	INSERT 4P MALE	PUR	BLACK
7	1	COUPLING NUT M12 MALE	BRASS	NICKEL
6	1	LABEL 50x69.8	VINYL	WHITE
5	-	CABLE	SEE SHEET 2	---
4	-	OVERMOLD	TPU	BLACK
3	1	SHIELD	BRASS	TIN
2	1	PLUG RJ45 TRANSPARENT	POLYCARBONATE	---
1	4 or 8	CONTACT RJ45 MALE	PHOSPHOR BRONZE	SELECTIVE GOLD

THIS DRAWING CONTAINS INFORMATION THAT IS PROPRIETARY TO MOLEX ELECTRONIC TECHNOLOGIES, LLC AND SHOULD NOT BE USED WITHOUT WRITTEN PERMISSION

FUNCTIONAL SYMBOLS
FA = 0
FC = 0
FD = 0
DIVISIONAL SYMBOLS

DIMENSION UNITS: mm
SCALE: 1:1

GENERAL TOLERANCES (UNLESS SPECIFIED)

ANGULAR TOL	±	1.0 °
4 PLACES	±	
3 PLACES	±	
2 PLACES	±	0.05
1 PLACE	±	0.1
0 PLACES	±	0.2

DRAFT WHERE APPLICABLE MUST REMAIN WITHIN DIMENSIONS

CURRENT REV DESC: CABLE AND STDS UPDATED

EC NO: 672185
DRWN: MDHARMANTI 2021/06/22
CHK'D: RSILLER 2021/09/20
APPR: RSILLER 2021/09/20

INITIAL REVISION:
DRWN: JMARSZALEK 2015/07/07
APPR: RSILLER 2020/05/12

THIRD ANGLE PROJECTION
DRAWING: A3-SIZE
SERIES: 120108

molex

CSE M12 RJ45 4P DC MA STR MA STR XM

PRODUCT CUSTOMER DRAWING

DOCUMENT NUMBER	DOC TYPE	DOC PART	REVISION
1201080256	PSD	000	A5

MATERIAL NUMBER	CUSTOMER	SHEET NUMBER
SEE SHEET 3	GENERAL MARKET	1 OF 3

DOCUMENT STATUS	P1	RELEASE DATE	2021/09/20 12:58:27

FORMAT: master_Sealed-A3
REVISION: J
DATE: 2020/01/14

NUMERICAL CODE (Available parts see PART LIST table. Other parts available upon request).

OPTIONS

E	1	6	A	0	6	0	X	X	M	X	X	X	X

- E=Ethernet
- Heads: 1=M12x1 4P D-Code; 6=RJ45
- Wiring type
- Heads style: 060=MA M12 STR / RJ45 Plug STR
- Cable type: See cable table
- Units: M=Meter; T=10x meter
- Length Examples: 005=0.5 units; 010=1 units; 150=15 units
- H= 2 pcs. of I/D Carrier

FOR CABLE TYPE "12" & "16"
KNURLED/HEXAGONAL NUT - 1202070090

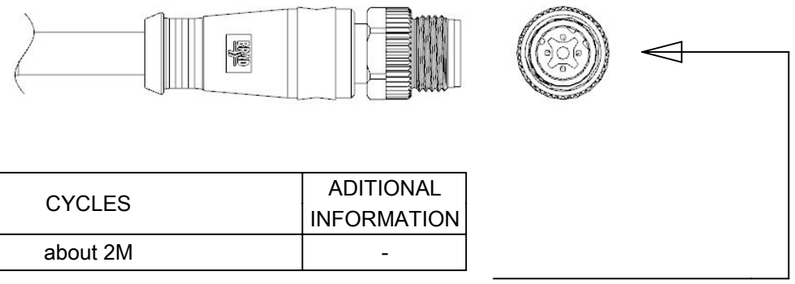

CABLE INFORMATION (for more information see Cable Data Sheet).

CABLE TYPE	CABLE O.D.	APPLICATION	CROSS SECTION	CABLE JACKET	UL	TEMP. RANGE STATIC BENDING RADIUS STATIC	TEMP. RANGE DYNAMIC BENDING RADIUS DYNAMIC	CYCLES	ADITIONAL INFORMATION
11	∅6.8mm	PROFINET TYPE C	22AWG	PUR GREEN	STYLE 20549	-40°C to +80°C / min.5xO.D.	-20°C to +70°C / min.7.5xO.D.	about 2M	-

TABLE 2

CABLE LENGTH TOLERANCES	
LENGTH	TOLERANCE
0m-1m	+40 mm
>1m-5m	+60 mm
>5m-10m	+80 mm
>10m-20m	+140 mm
>20m-30m	+160 mm
>30m	+1% length

DOCUMENT STATUS	P1	RELEASE DATE	2021/09/20 12:58:27

FORMAT: master_Sized-A3
REVISION: J
DATE: 2020/01/14

FUNCTIONAL SYMBOLS: FA = 0; FC = 0; FD = 0
DIVISIONAL SYMBOLS

THIS DRAWING CONTAINS INFORMATION THAT IS PROPRIETARY TO MOLEX ELECTRONIC TECHNOLOGIES, LLC AND SHOULD NOT BE USED WITHOUT WRITTEN PERMISSION

DIMENSION UNITS	SCALE
mm	1:1

GENERAL TOLERANCES (UNLESS SPECIFIED)

ANGULAR TOL	±	1.0 °
4 PLACES	±	
3 PLACES	±	
2 PLACES	±	0.05
1 PLACE	±	0.1
0 PLACES	±	0.2

DRAFT WHERE APPLICABLE MUST REMAIN WITHIN DIMENSIONS

CURRENT REV DESC: CABLE AND STDS UPDATED

EC NO: 672185
DRWN: MDHARMANTI 2021/06/22
CHK'D: RSILLER 2021/09/20
APPR: RSILLER 2021/09/20

INITIAL REVISION:
DRWN: JMARSZALEK 2015/07/07
APPR: RSILLER 2020/05/12

THIRD ANGLE PROJECTION | DRAWING: A3-SIZE | SERIES: 120108

molex

CSE M12 RJ45 4P DC MA STR MA STR XM

PRODUCT CUSTOMER DRAWING

DOCUMENT NUMBER	DOC TYPE	DOC PART	REVISION
1201080256	PSD	000	A5

MATERIAL NUMBER	CUSTOMER	SHEET NUMBER
SEE SHEET 3	GENERAL MARKET	2 OF 3

PART LIST

No.	Part No.	Engineering No.	L (Cable Length)
1	1201088255	E16A06011M002	0.2m
2	1201088120	E16A06011M005	0.5m
3	1201080256	E16A06011M010	1m
4	1201080203	E16A06011M020	2m
5	1201088121	E16A06011M030	3m
6	1201080289	E16A06011M040	4m
7	1201080257	E16A06011M050	5m
8	1201080285	E16A06011M060	6m
9	1201088122	E16A06011M070	7m
10	1201080286	E16A06011M080	8m
11	1201080290	E16A06011M090	9m
12	1201080258	E16A06011M100	10m
13	1201080291	E16A06011M120	12m
14	1201080292	E16A06011M140	14m
15	1201080259	E16A06011M150	15m
16	1201080293	E16A06011M180	18m
17	1201080260	E16A06011M200	20m
18	1201088123	E16A06011M230	23m
19	1201080261	E16A06011M250	25m
20	1201080262	E16A06011M300	30m
21	1201088388	E16A06011M350	35m
22	1201088199	E16A06011M400	40m
23	1201080263	E16A06011M500	50m
24	1201080294	E16A06011M700	70m
25	1201088196	E16A06011M900	90m
26	1201088200	E16A06011T100	100m

THIS DRAWING CONTAINS INFORMATION THAT IS PROPRIETARY TO MOLEX ELECTRONIC TECHNOLOGIES, LLC AND SHOULD NOT BE USED WITHOUT WRITTEN PERMISSION

FUNCTIONAL SYMBOLS: A = 0, C = 0, D = 0

DIVISIONAL SYMBOLS

DIMENSION UNITS	SCALE
mm	1:1

GENERAL TOLERANCES (UNLESS SPECIFIED)

ANGULAR TOL	± 1.0 °
4 PLACES	±
3 PLACES	±
2 PLACES	± 0.05
1 PLACE	± 0.1
0 PLACES	± 0.2

DRAFT WHERE APPLICABLE MUST REMAIN WITHIN DIMENSIONS

CURRENT REV DESC: CABLE AND STDS UPDATED

EC NO: 672185
DRWN: MDHARMANTI 2021/06/22
CHK'D: RSILLER 2021/09/20
APPR: RSILLER 2021/09/20

INITIAL REVISION:
DRWN: JMARSZALEK 2015/07/07
APPR: RSILLER 2020/05/12

THIRD ANGLE PROJECTION | DRAWING: A3-SIZE | SERIES: 120108

molex

CSE M12 RJ45 4P DC MA STR MA STR XM

PRODUCT CUSTOMER DRAWING

DOCUMENT NUMBER	DOC TYPE	DOC PART	REVISION
1201080256	PSD	000	A5

MATERIAL NUMBER	CUSTOMER	SHEET NUMBER
SEE SHEET 3	GENERAL MARKET	3 OF 3

DOCUMENT STATUS	P1	RELEASE DATE	2021/09/20 12:58:27

FORMAT: master_Sheet-A3
REVISION: J
DATE: 2020/01/14