Aug.1.2022 Copyright 2022 HIROSE ELECTRIC CO., LTD. All Rights Reserved.
In case of consideration for using Automotive equipment / device which demand high reliability, kindly contact our sales window correspondents.

	COUNT	DESCRIPTION OF REVISIONS	BY	CHKD	DATE		COUNT	DESCRIPTION OF REVISIONS	BY	CHKD	DATE
△					. .	△					. .
△					. .	△					. .
△					. .	△					. .

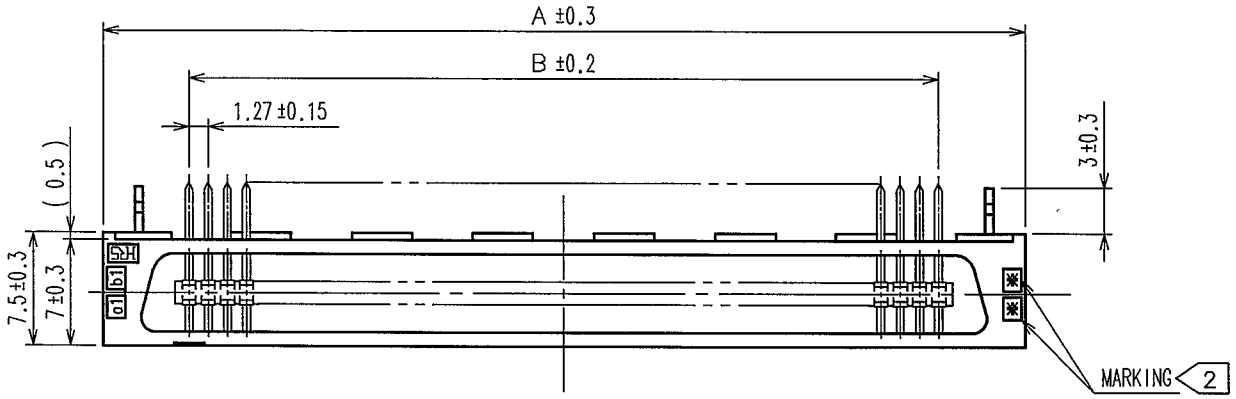

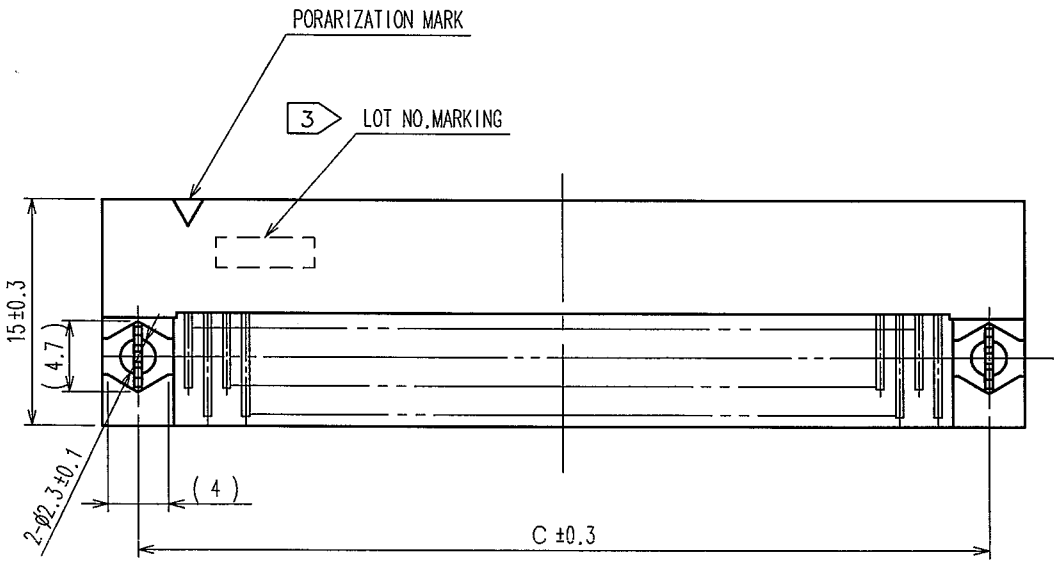

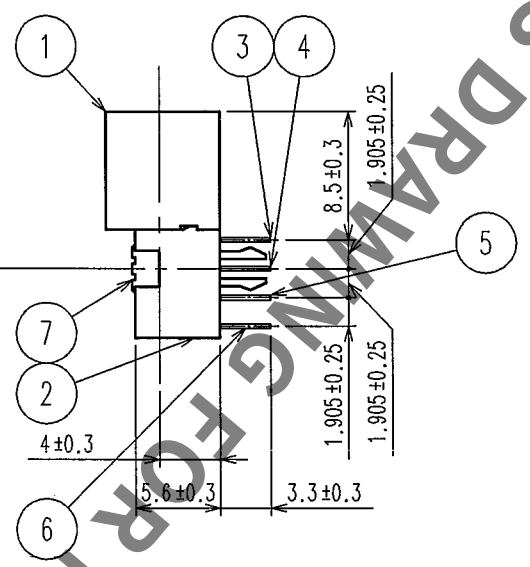

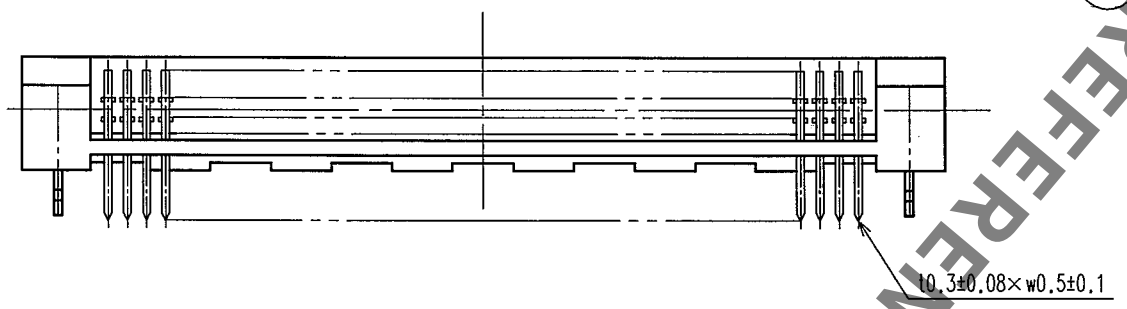

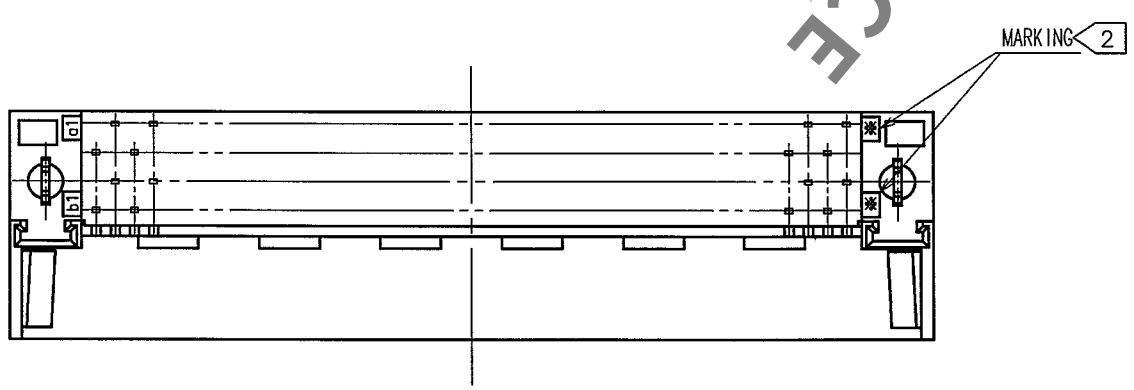

MATING SIDE

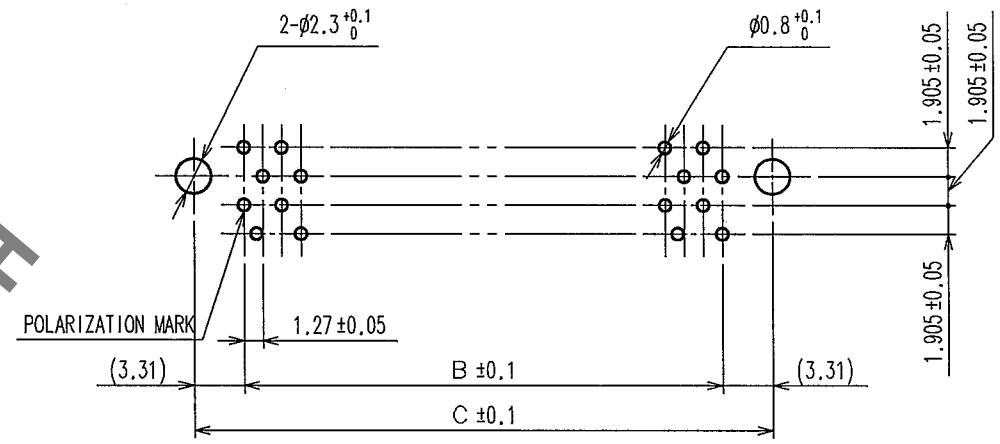

RECOMMENDEND PC BOARD HOLE PATTERN(MOUNTING SIDE)

t=1.6

HRS No.	PART No.	1	A	B	C	2
FX2-20P-1.27DSL(71)	CL572-2651-4-71	20	22.75	11.43	18.05	10
FX2-32P-1.27DSL(71)	CL572-2652-7-71	32	30.37	19.05	25.67	16
FX2-40P-1.27DSL(71)	CL572-2653-0-71	40	35.45	24.13	30.75	20
FX2-52P-1.27DSL(71)	CL572-2654-2-71	52	43.07	31.75	38.37	26
FX2-60P-1.27DSL(71)	CL572-2655-5-71	60	48.15	36.83	43.45	30
FX2-68P-1.27DSL(71)	CL572-2656-8-71	68	53.23	41.91	48.53	34
FX2-80P-1.27DSL(71)	CL572-2657-0-71	80	60.85	49.53	56.15	40
FX2-100P-1.27DSL(71)	CL572-2658-3-71	100	73.55	62.23	68.85	50
FX2-120P-1.27DSL(71)	CL572-2659-6-71	120	86.25	74.93	81.55	60

NOTE 1 NUMBER OF PIN.
2 INDICATIONS.
3 SURFACE INDICATED LOT NO. SHALL BE OPTIONAL.
4 THE DIMENSIONS IN PARENTHESES ARE FOR REFERENCE.

NO.	MATERIAL	FINISH, REMARKS	NO.	MATERIAL	FINISH, REMARKS
7	PHOSPHOR BRONZE	TIN PLATED	3~6	PHOSPHOR BRONZE	CONTACT AREA:GOLD 0.2μm min DIP AREA:TIN-PLATING 2μm min
1,2	POLYAMIDE	BLACK UL94V-0			UNDER PLATING:NICKEL 2μm min

CODE NO.(OLD)	DRAWN	DESIGNED	CHECKED	APPROVED	RELEASED
	A.Suzukawa '05·03·25	K.Doi '05·03·25	H.Ozawa '05·03·25	H.Ozawa '05·03·25	. .

SCALE FREE	DRAWING NO. EDC3-083294-21	PART NO. FX2-**P-1.27DSL(71)
UNITS mm	HRS HIROSE ELECTRIC CO., LTD	CODE NO. CL572 1/1

TO
PCK

HRS DRAWING FOR REFERENCE