FEMALE PLUG M12 90° ANGLED TO MALE PLUG M12 STRAIGHT

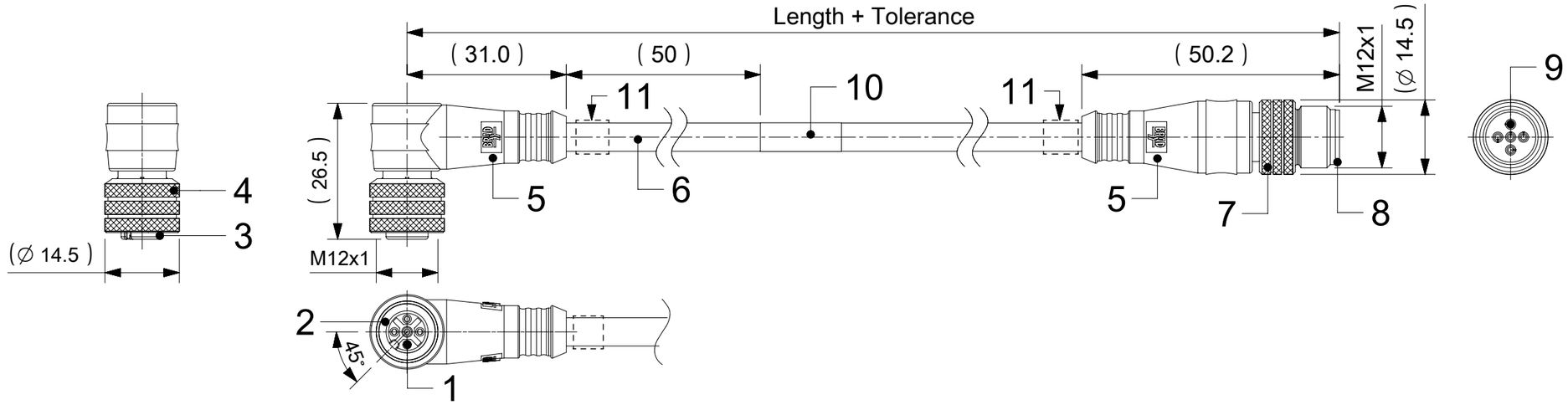

NOTES:

RATED VOLTAGE: 3, 4 contacts 250V per IEC 60664
5 contacts 60V per IEC 60664
5 contacts 250V per UL 2238
8 contacts 30V per IEC 60664

RATED CURRENT: 3, 4, 5 contacts 4A
8 contacts 2A

PROTECTION CLASS: IP 67

TEMPERATURE: -25°C / +85°C

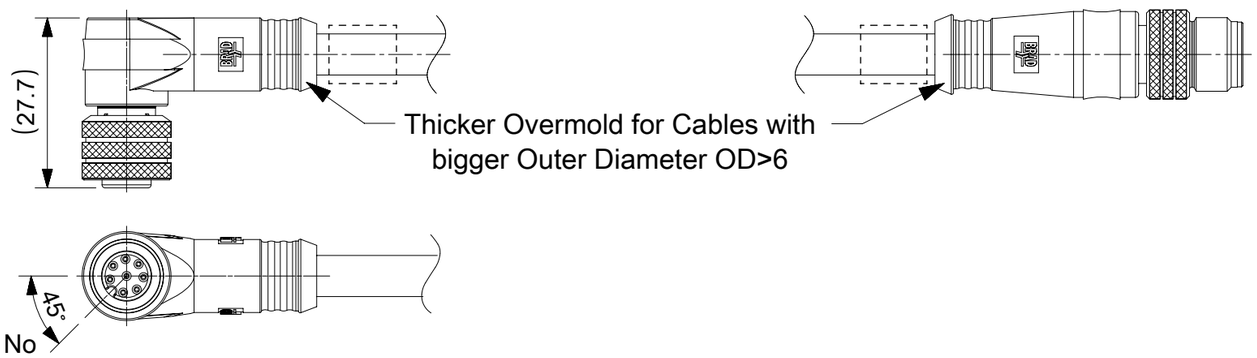

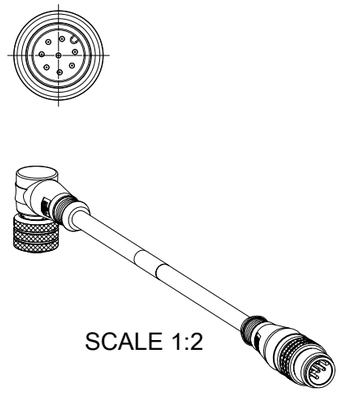

* FOR CABLES Ixx USE PRINTING ON THE CABLE IN THE SAME MEASUREMENT LIKE FOR LABEL – ENGINEERING No

CONTACTS POSITION FRONT VIEW:

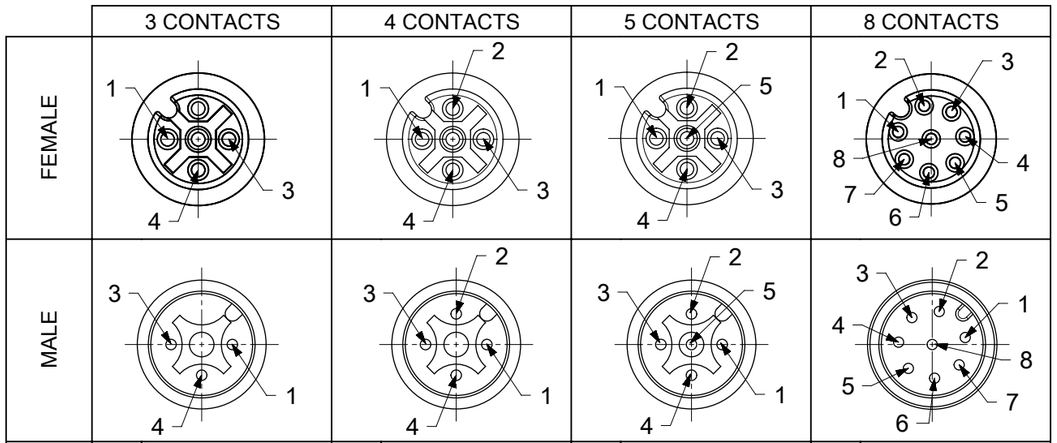

CONNECTIONS	3 CONTACTS PIN	3 CONTACTS WIRE	4 CONTACTS PIN	4 CONTACTS WIRE	5 CONTACTS PIN	5 CONTACTS WIRE	8 CONTACTS PIN	8 CONTACTS WIRE
	1	BROWN	1	BROWN	1	BROWN	1	WHITE
	2	---	2	WHITE	2	WHITE	2	BROWN
	3	BLUE	3	BLUE	3	BLUE	3	GREEN
	4	BLACK	4	BLACK	4	BLACK	4	YELLOW
	5	---	5	---	5	GREY OR GREEN/YELLOW	5	GREY
							6	PINK
							7	BLUE
							8	RED

CODING REQUIRED TO IEC 61076-2-101

FOR OPTIONS SEE - NUMERICAL CODE - ON SHEET 2

ITEM	QTY.	DESCRIPTION	MATERIAL	FINISH
11	SEE PART LIST	ID CARRIER	PVC	TRANSPARENT
10	1	LABEL YELLOW	VINYL	---
	-	PRINTING FOR CABLES Ixx	---	---
9	3 / 4 / 5 / 8	CONTACT MALE	SEE PART LIST	SELECTIVE Au OVER Ni
8	1	INSERT MALE BLACK	SEE PART LIST	---
7	1	COUPLING NUT MALE	SEE PART LIST	---
6	-	CABLE	SEE SHEET 2	---
5	-	OVERMOULDING BLACK	SEE PART LIST	---
4	1	COUPLING NUT FEMALE	SEE PART LIST	---
3	1	INSERT FEMALE BLACK	SEE PART LIST	---
2	1	O-RING RED	FPM	---
1	3 / 4 / 5 / 8	CONTACT FEMALE	SEE PART LIST	SELECTIVE Au OVER Ni

THIS DRAWING CONTAINS INFORMATION THAT IS PROPRIETARY TO MOLEX ELECTRONIC TECHNOLOGIES, LLC AND SHOULD NOT BE USED WITHOUT WRITTEN PERMISSION

FUNCTIONAL SYMBOLS: FA = 0, FC = 0, FP = 0

DIVISIONAL SYMBOLS

DIMENSION UNITS: mm
SCALE: 1:1

GENERAL TOLERANCES (UNLESS SPECIFIED)

ANGULAR TOL	±	1.0 °
4 PLACES	±	
3 PLACES	±	
2 PLACES	±	0.05
1 PLACE	±	0.3
0 PLACES	±	0.5

DRAFT WHERE APPLICABLE MUST REMAIN WITHIN DIMENSIONS

CURRENT REV DESC:

EC NO: 684766
DRWN: SSM 2021/11/03
CHK'D: RSILLER 2021/11/10
APPR: RSILLER 2021/11/10

INITIAL REVISION:
DRWN: JMARSZALEK 2016/10/06
APPR: RSILLER 2016/12/08

molex

CSE M12 XP AC FE RA MA STR XM DE

PRODUCT CUSTOMER DRAWING

DOCUMENT NUMBER	DOC TYPE	DOC PART	REVISION
1200660973	PSD	000	A9

THIRD ANGLE PROJECTION	DRAWING	SERIES	MATERIAL NUMBER	CUSTOMER	SHEET NUMBER
	A3-SIZE	120066	SEE SHEET 3, 4	GENERAL MARKET	1 OF 4

DOCUMENT STATUS	P1	RELEASE DATE	2021/11/10 13:49:49

FORMAT: master_molex-A3
REVISION: J
DATE: 2020/01/

ENGINEERING NO. - NUMERICAL CODE (Available parts see PART LIST table. Other parts available upon request).

8	8	X	0	X	1	X	X	X	X	X	X	X	X

OPTIONS

88=Micro-Change M12x1 Double ended

Contacts:
3=3 Contacts
4=4 Contacts
5=5 Contacts
8=8 Contacts

Heads style:
031=Plug Female 90° to Plug Male Straight
021=Plug Female 90° to Plug Male Straight with Female Coupling Nut

Cable type: See Table

Units:
M=Meter
C=Centimeter

Length
Examples:
005=0.5 unit
010=1 unit
100=10 units

Overmold color:
Blank (Standard)=Black TPU
Blank=Yellow TPU for cables A09, S19, S20, S26
Blank=Yellow TPE-E for cables K03, K05
A=Grey / G=Black / Y=Yellow

Coupling Nut:
Blank (Standard)=Knurled Brass Ni Plated
1=Hexagonal Stainless steel
5=Knurled Derlin
7=Knurled Brass Ni Plated, Teflon Coated
Blank=7 for cables I20, I26, K03, K05, P82, S26
9=Knurled / Hexagonal Brass Ni Plated SW13

H= 2 pcs. of I/D Carrier PVC Transparent (Cables Ixx & P82 always with 2 pcs. of I/D Carrier even if no H in Engineering No.)

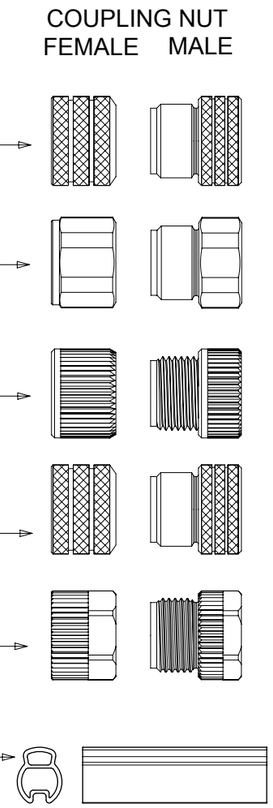

CABLE INFORMATION (for more information see Cable Data Sheet).

CABLE TYPE	NO. OF WIRES	CROSS SECTION	CABLE JACKET	UL	CSA	STATIC: TEMP. / BENDING RADIUS	DYNAMIC: TEMP. / BENDING RADIUS	DRAG CHAIN	SHIELD
I03	3 / 4 / 5	0.34mm²	PVC CEI GREY	-	-	-30°C to +70°C	-5°C to +70°C	-	-
I20	3 / 4	0.34mm²	PVC CEI GREY	-	-	-30°C to +70°C	-5°C to +70°C	-	YES
I26	5	0.34mm²	PVC CEI GREY	-	-	-30°C to +70°C	-5°C to +70°C	-	YES
K03	4	18AWG	TPE YELLOW	UL ITC or PLC	I/II A/B 90°C/300V	max 105°C	-	-	-
K05	3 / 4 / 5	22AWG	TPE YELLOW	UL ITC or PLC	I/II A/B 90°C/300V	max 105°C	-	-	-
P82	3 / 4 / 5	0.34mm²	PUR IRR ORANGE	-	-	-50°C to +105°C, >5xO.D.	-40°C to +105°C, >7.5xO.D.	-	-
S20	3 / 4 / 5	0.34mm²	PVC YELLOW	UL 2661/1731	C22.2 II A 105°C/300V	-30°C to +105°C	-	-	YES
E02	3 / 4 / 5 / 8	0.25mm²	PVC BLACK	UL 2464/1729	C22.2 I/II A/B 80°C/300V	-30°C to +80°C, 10xO.D.	-10°C to +80°C, 15xO.D.	-	-
E03	3 / 4 / 5	0.34mm²	PVC BLACK	UL 2464/1729	C22.2 I/II A/B 80°C/300V	-30°C to +80°C, 10xO.D.	-10°C to +80°C, 15xO.D.	-	-
H09	3 / 4 / 5	0.34mm²	PUR BLACK LS0H	UL 21198/10493	C22.2 I/II A/B 80°C/300V	-40°C to +80°C, 5xO.D.	-25°C to +80°C, 10xO.D.	2 000 000 cycles at 20°C, Temp. range +5°C to +60°C	-
P03	3 / 4 / 5	0.34mm²	PUR / PVC BLACK	-	-	-30°C to +80°C, >7xO.D.	-5°C to +80°C, >15xO.D.	-	-
H08	8	0.25mm²	PUR BLACK LS0H	UL 21198/10493	UL 21198/10493	-40°C to +80°C, >5xO.D.	-25°C to +80°C, >10xO.D.	2 000 000 cycles, Temp max 60°C	-
P02	8	0.25mm²	PUR / PVC BLACK	-	-	-30°C to +80°C, >7xO.D.	-5°C to +80°C, >15xO.D.	-	-

CABLE LENGTH TOLERANCES

OVER	UP TO AND INCLUDING	TOLERANCES
0	305mm	+19mm
305mm	915mm	+45mm
915mm	1830mm	+56mm
1830mm	3660mm	+89mm
3660mm	7320mm	+165mm
7320mm	14640mm	+317mm
14640mm	30500mm	+610mm
30500mm	>	+2% of finished length

THIS DRAWING CONTAINS INFORMATION THAT IS PROPRIETARY TO MOLEX ELECTRONIC TECHNOLOGIES, LLC AND SHOULD NOT BE USED WITHOUT WRITTEN PERMISSION

FUNCTIONAL SYMBOLS: EA = 0, EC = 0, EP = 0
DIVISIONAL SYMBOLS

DIMENSION UNITS: mm
SCALE: 1:1
GENERAL TOLERANCES (UNLESS SPECIFIED)

ANGULAR TOL	±	1.0 °
4 PLACES	±	
3 PLACES	±	
2 PLACES	±	0.05
1 PLACE	±	0.3
0 PLACES	±	0.5

DRAFT WHERE APPLICABLE MUST REMAIN WITHIN DIMENSIONS

CURRENT REV DESC:
EC NO: 684766
DRWN: SSM 2021/11/03
CHK'D: RSILLER 2021/11/10
APPR: RSILLER 2021/11/10

INITIAL REVISION:
DRWN: JMARSZALEK 2016/10/06
APPR: RSILLER 2016/12/08

THIRD ANGLE PROJECTION | DRAWING: A3-SIZE | SERIES: 120066

molex

CSE M12 XP AC FE RA MA STR XM DE

PRODUCT CUSTOMER DRAWING

DOCUMENT NUMBER	DOC TYPE	DOC PART	REVISION
1200660973	PSD	000	A9

MATERIAL NUMBER	CUSTOMER	SHEET NUMBER
SEE SHEET 3, 4	GENERAL MARKET	2 OF 4

DOCUMENT STATUS	P1	RELEASE DATE	2021/11/10 13:49:49

FORMAT: master-tb-prod-A3
REVISION: J
DATE: 2020/01/14

PART LIST

No.	Part No.	Engineering No.	Cable Length
1	1200060052	884031I20M005	0.5m
2	1200060053	884031I20M010	1m
3	1200060054	884031I20M015	1.5m
4	1200060055	884031I20M020	2m
5	1200070132	883031I03M003	0.3m
6	1200070133	883031I03M006	0.6m
7	1200070134	883031I03M010	1m
8	1200070136	883031I03M020	2m
9	1200070137	883031I03M030	3m
10	1200070138	883031I03M050	5m
11	1200070152	883031S20M010	1m
12	1200070153	883031S20M020	2m
13	1200070156	883031S20M050	5m
14	1200070522	884031I03M020	2m
15	1200070523	884031I03M030	3m
16	1200070534	884031S20M030	3m
17	1200070651	884031I03M006	0.6m
18	1200070768	884031S20M050	5m
19	1200070783	884031S20M100H	10m
20	1200071010	884031P82M100	10m
21	1200071096	884031P82M0037	0.3m
22	1200071138	884031S20M010H	1m
23	1200071139	884031S20M020H	2m
24	1200071143	884031P82M0107	1m
25	1200071144	884031P82M0207	2m
26	1200071164	884031S20M003H	0.3m
27	1200071179	884031S20M006H	0.6m
28	1200071183	884031S20M030H	3m
29	1200071189	884031S20M050H	5m
30	1200071200	884031S20M015H	1.5m
31	1200071236	884031S20M005H	0.5m
32	1200071280	884031S20M040H	4m
33	1200071318	884031P82M0067	0.6m
34	1200071341	884031I20M030	3m
35	1200071493	883031P82M0507	5m

No.	Part No.	Engineering No.	Cable Length
36	1200071575	884031P82M006	0.6m
37	1200071576	884031P82M010	1m
38	1200071577	884031P82M015	1.5m
39	1200071578	884031P82M0307	3m
40	1200071579	884031P82M050	5m
41	1200071581	884031P82M020	2m
42	1200071832	884031I20M050	5m
43	1200071833	884031I20M100	10m
44	1200071893	884031S20M100	10m
45	1200071994	885031P82M0307	3m
46	1200072696	883031S20M010H	1m
47	1200072725	885031I26M005	0.5m
48	1200072726	885031I26M010	1m
49	1200659070	884031I20M010Y	1m
50	1200659071	884031I20M015Y	1.5m
51	1200659115	884031I20M005Y	0.5m
52	1200660374	884031K05M005	0.5m
53	1200660375	884031K05M006	0.6m
54	1200660376	884031K05M010	1m
55	1200660377	884031K05M015	1.5m
56	1200660378	884031K05M020	2m
57	1200660379	884031K05M030	3m
58	1200660380	884031K05M040	4m
59	1200660381	884031K05M050	5m
60	1200660382	884031K05M060	6m
61	1200660383	884031S20M010	1m
62	1200660546	884031K05M100	10m
63	1200661046	885031K03M010	1m
64	1200661047	885031K03M020	2m
65	1200661049	885031K03M040	4m
66	1200661050	885031K03M050	5m
67	1200661769	884031K05M150	15m
68	1200669556	885031P03M015	1.5m
69	1200660969	884031K03M003	0.3m
70	1200661481	884031K03M120	12m

No.	Part No.	Engineering No.	Cable Length
71	1200660971	884031K03M006	0.6m
72	1200660973	884031K03M010	1m
73	1200660975	884031K03M015	1.5m
74	1200660976	884031K03M020	2m
75	1200660977	884031K03M030	3m
76	1200660978	884031K03M040	4m
77	1200660980	884031K03M050	5m
78	1200660982	884031K03M060	6m
79	1200660983	884031K03M070	7m
80	1200660984	884031K03M090	9m
81	1200660985	884031K03M100	10m
82	1200665007	884031P82M0157	1.5m
83	1200665039	884031S20M003	0.3m
84	1200665053	884031S20M060H	6m
85	1200665074	884031K05M080	8m
86	1200668052	883031S20M006	0.6m
87	1200668071	884031S20M020	2m
88	1200668191	883031S20M030	3m
89	1200668221	884031P82M0407	4m
90	1200668237	883031S20M100	10m
91	1200668247	884031P82M0057	0.5m
92	1200668258	883031I03M080	8m
93	1200668287	884031I20M025	2.5m
94	1200668392	884031P82M0607	6m
95	1200668531	884031P82M0507	5m
96	1200668532	884031P82M1007	10m
97	1200668647	884031P82M0067Y	0.6m
98	1200668666	884031P82M0107Y	1m
99	1200668667	884031I20M030Y	3m
100	1200070443	884021S20M003	0.3m
101	1200070444	884021S20M006	0.6m
102	1200070445	884021S20M010	1m
103	1200070446	884021S20M020	2m
104	1200070447	884021S20M030	3m
105	1200070449	884021S20M050	5m

Pos.	Part No.	Engineering No.	Cable Length
106	1200668160	883021S20M010	1m
107	1200668608	883031E02M020	2m
108	1200668613	883031E02M030	3m
109	1200659035	883031E02M050	5m
110	1200668612	883031E02M100	10m
111	1200668908	883031E03M003H	0.3m
112	1200070118	883031E03M006	0.6m
113	1200668909	883031E03M006H	0.6m
114	1200070119	883031E03M010	1m
115	1200668910	883031E03M010H	1m
116	1200070945	883031E03M015	1.5m
117	1200668967	883031E03M015H	1.5m
118	1200070121	883031E03M020	2m
119	1200072445	883031E03M020H	2m
120	1200070123	883031E03M030	3m
121	1200668911	883031E03M030H	3m
122	1200072164	883031E03M040	4m
123	1200668968	883031E03M040H	4m
124	1200070125	883031E03M050	5m
125	1200668912	883031E03M050H	5m
126	1200668175	883031E03M060	6m
127	1200070127	883031E03M100	10m
128	1200658762	883031H09M006	0.6m
129	1200658763	883031H09M010	1m
130	1200658764	883031H09M020	2m
131	1200658765	883031H09M030	3m
132	1200669349	883031H09M030H	3m
133	1200658766	883031H09M040	4m
134	1200658767	883031H09M050	5m
135	1200658768	883031H09M100	10m
136	1200070140	883031P03M003	0.3m
137	1200070141	883031P03M006	0.6m
138	1200070142	883031P03M010	1m
139	1200668324	883031P03M010G	1m
140	1200071121	883031P03M010H	1m
141	1200070143	883031P03M020	2m
142	1200668325	883031P03M020G	2m

THIS DRAWING CONTAINS INFORMATION THAT IS PROPRIETARY TO MOLEX ELECTRONIC TECHNOLOGIES, LLC AND SHOULD NOT BE USED WITHOUT WRITTEN PERMISSION

FUNCTIONAL SYMBOLS: = 0 / = 0 / = 0

DIVISIONAL SYMBOLS

DIMENSION UNITS	SCALE
mm	1:1

GENERAL TOLERANCES (UNLESS SPECIFIED)

ANGULAR TOL	±	1.0 °
4 PLACES	±	
3 PLACES	±	
2 PLACES	±	0.05
1 PLACE	±	0.3
0 PLACES	±	0.5

DRAFT WHERE APPLICABLE MUST REMAIN WITHIN DIMENSIONS

CURRENT REV DESC:

EC NO: 684766
DRWN: SSM 2021/11/03
CHK'D: RSILLER 2021/11/10
APPR: RSILLER 2021/11/10

INITIAL REVISION:
DRWN: JMARSZALEK 2016/10/06
APPR: RSILLER 2016/12/08

molex

CSE M12 XP AC FE RA MA STR XM DE

PRODUCT CUSTOMER DRAWING

DOCUMENT NUMBER	DOC TYPE	DOC PART	REVISION
1200660973	PSD	000	A9

THIRD ANGLE PROJECTION	DRAWING	SERIES	MATERIAL NUMBER	CUSTOMER	SHEET NUMBER
	A3-SIZE	120066	SEE PART LIST	GENERAL MARKET	3 OF 4

DOCUMENT STATUS	P1	RELEASE DATE	2021/11/10 13:49:49

FORMAT: master-2-col-A3
REVISION: J
DATE: 2020/01/1

Pos.	Part No.	Engineering No.	Cable Length
143	1200668753	883031P03M020H	2m
144	1200070144	883031P03M030	3m
145	1200668326	883031P03M030G	3m
146	1200070145	883031P03M050	5m
147	1200668520	883031P03M070	7m
148	1200070146	883031P03M100	10m
149	1200070507	884031E03M003	0.3m
150	1200070508	884031E03M006	0.6m
151	1200070509	884031E03M010	1m
152	1200668361	884031E03M015	1.5m
153	1200070511	884031E03M020	2m
154	1200070512	884031E03M030	3m
155	1200669260	884031E03M030H	3m
156	1200070904	884031E03M050	5m
157	1200071157	884031E03M060	6m
158	1200071278	884031E03M100	10m
159	1200072011	884031E03M200	20m
160	1200668669	884031H09M006	0.6m
161	1200668846	884031H09M008	0.8m
162	1200668210	884031H09M009	0.9m
163	1200668484	884031H09M010	1m
164	1200668848	884031H09M013	1.3m
165	1200668488	884031H09M015	1.5m
166	1200668845	884031H09M018	1.8m
167	1200668212	884031H09M020	2m
168	1200668847	884031H09M021	2.1m
169	1200668215	884031H09M030	3m
170	1200668670	884031H09M050	5m
171	1200668671	884031H09M100	10m
172	1200070526	884031P03M003	0.3m
173	1200070527	884031P03M006	0.6m
174	1200060056	884031P03M010	1m
175	1200060057	884031P03M020	2m
176	1200070529	884031P03M030	3m
177	1200071187	884031P03M050	5m
178	1200072012	884031P03M100	10m
179	1300288001	885031D12M020	2m
180	1200668658	885031E02M020	2m
181	1200668610	885031E02M050	5m
182	1200668660	885031E02M100	10m
183	1200668339	885031E03M006	0.6m
184	1200668189	885031E03M010	1m
185	1200668278	885031E03M020	2m
186	1200668340	885031E03M030	3m
187	1200668279	885031E03M050	5m
188	1200668653	885031E03M070	7m
189	1200668348	885031E03M100	10m
190	1200668761	885031E03M150	15m

Pos.	Part No.	Engineering No.	Cable Length
191	1200669229	885031H09C250	25m
192	1200668512	885031H09M006	0.6m
193	1200668496	885031H09M010	1m
194	1200668513	885031H09M020	2m
195	1200668514	885031H09M030	3m
196	1200668515	885031H09M050	5m
197	1200668516	885031H09M100	10m
198	1200073085	885031P03M006	0.6m
199	1200668188	885031P03M010	1m
200	1200072376	885031P03M0105	1m
201	1200070917	885031P03M020	2m
202	1200668091	885031P03M025	2.5m
203	1200070919	885031P03M030	3m
204	1200668273	885031P03M050	5m
205	1200073086	885031P03M100	10m
206	1200070434	884021E03M020	2m
207	1200072575	888031P02M030	3m
208	1200072708	888031P02M060	6m
209	1200658319	888031H08M050	5m
210	1200661620	888031P02M020	2m
211	1200661626	888031P02M010	1m
212	1200668673	888031E02M0041	0.4m
213	1200668849	888031P02M150	15m
214	1200656208	888031H08C250	2.5m
215	1200656209	888031H08M005	0.5m
216	1200656210	888031H08M008	0.8m
217	1200656211	888031H08M012	1.2m
218	1200656212	888031H08M015	1.5m
219	1200070057	883021E03M006	0.6m
220	1200070058	883021E03M020	2m
221	1200070439	884021P03M006	0.6m
222	1200070440	884021P03M010	1m
223	1200070441	884021P03M020	2m
224	1200070442	884021P03M030	3m
225	1200070870	883021P03M050	5m
226	1200072191	883021E03M030	3m
227	1200072198	883021E03M050	5m
228	1200665038	884021E03M050	5m
229	1200668061	884021E03M006	0.6m
230	1200668219	884021E03M030	3m
231	1200668673	888031E02M0041	0.4m
232	1200669541	884031P03M015	1.5m
233	1200669885	884031E03M004	0.4m
234	1200669886	884031E03M005	0.5m
235	1200669887	884031E03M013	1.3m
236	1200669888	884031E03M080	8m
237			
238			

DOCUMENT STATUS	P1	RELEASE DATE	2021/11/10 13:49:49

FORMAT: master-Sized-A3
REVISION: J
DATE: 2020/01/1

THIS DRAWING CONTAINS INFORMATION THAT IS PROPRIETARY TO MOLEX ELECTRONIC TECHNOLOGIES, LLC AND SHOULD NOT BE USED WITHOUT WRITTEN PERMISSION

FUNCTIONAL SYMBOLS: FA = 0, FC = 0, FD = 0

DIVISIONAL SYMBOLS

DIMENSION UNITS	SCALE
mm	1:1

GENERAL TOLERANCES (UNLESS SPECIFIED)

ANGULAR TOL	±	1.0 °
4 PLACES	±	
3 PLACES	±	
2 PLACES	±	0.05
1 PLACE	±	0.3
0 PLACES	±	0.5

DRAFT WHERE APPLICABLE MUST REMAIN WITHIN DIMENSIONS

CURRENT REV DESC:

EC NO: 684766
DRWN: SSM 2021/11/03
CHK'D: RSILLER 2021/11/10
APPR: RSILLER 2021/11/10

INITIAL REVISION:
DRWN: JMARSZALEK 2016/10/06
APPR: RSILLER 2016/12/08

molex

CSE M12 XP AC FE RA MA STR XM DE

PRODUCT CUSTOMER DRAWING

DOCUMENT NUMBER	DOC TYPE	DOC PART	REVISION
1200660973	PSD	000	A9

THIRD ANGLE PROJECTION	DRAWING	SERIES	MATERIAL NUMBER	CUSTOMER	SHEET NUMBER
	A3-SIZE	120066	SEE PART LIST	GENERAL MARKET	4 OF 4

FEMALE FACE VIEW	
4 POLE	5 POLE
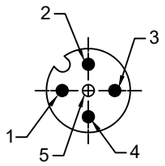	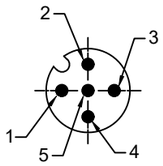
WIRING DIAGRAM	
1 BROWN 2 WHITE 3 BLUE 4 BLACK 5 NOT USED	1 BROWN 2 WHITE 3 BLUE 4 BLACK 5 GRAY

PART NO	ENGINEERING NO.	FINISHED LENGTH	POLES	CABLE DIA.
1200660969	884031K03M003	0.3M [1FT]	4	.26/6.6
1202010015	884031K03M200	20M [65FT 7 IN]		
1200661045	885031K03M005	0.5M [1FT 8 IN]	5	.28/7.1
1200661961	885031K03M200	20M [65FT 7 IN]		

MALE FACE VIEW	
4 POLE	5 POLE
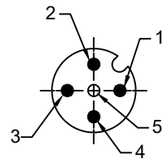	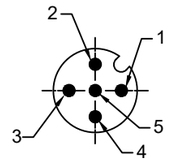
WIRING DIAGRAM	
1 BROWN 2 WHITE 3 BLUE 4 BLACK 5 NOT USED	1 BROWN 2 WHITE 3 BLUE 4 BLACK 5 GRAY

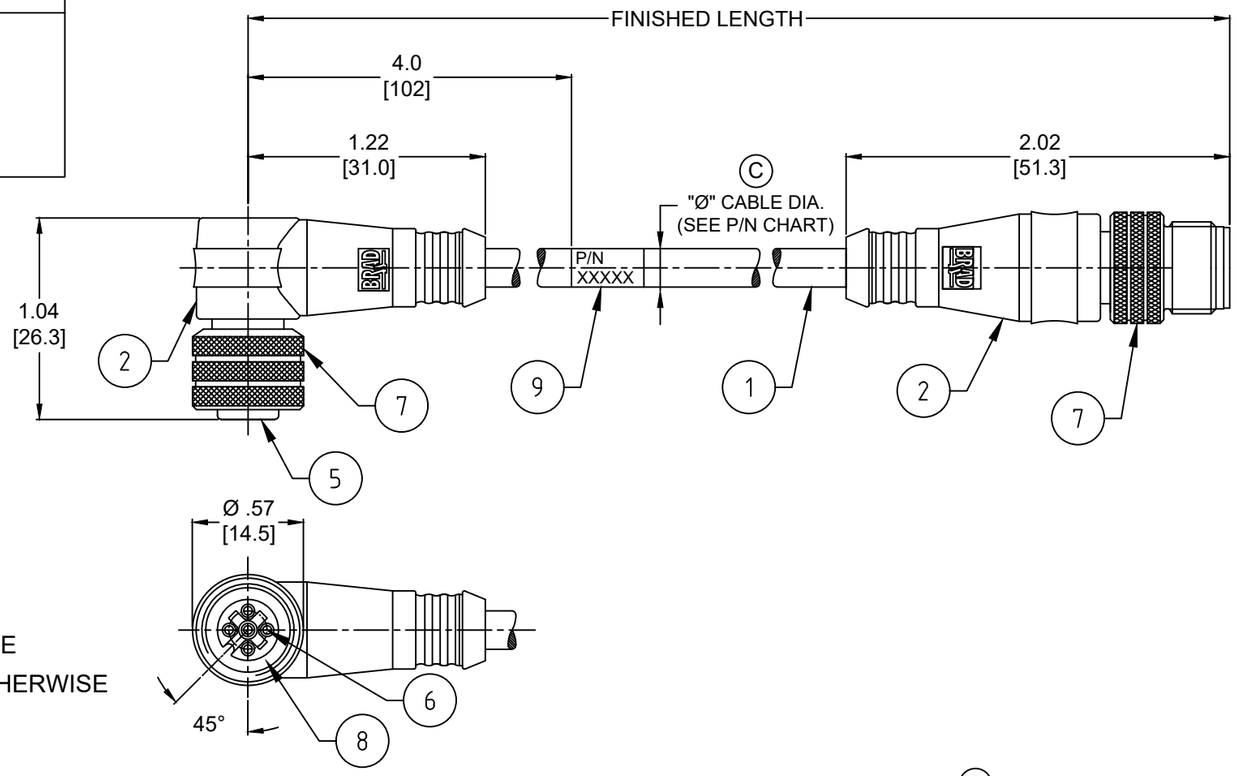

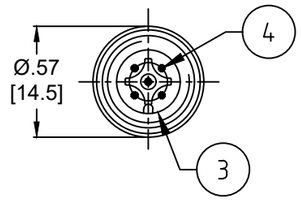

NOTES:

1. MATERIAL: AS NOTED
2. FINISH: AS NOTED
3. ELECTRICAL:
   VOLTAGE: 250V
   CURRENT: 4A
4. TEMP RATING: -20°TO +105°C
5. PROTECTION: IP67 (WHEN MATED)
6. COUPLING THREAD: M12X1
7. UL RECOGNIZED FILE: E152210
   CSA CERTIFIED FILE: LR6837 Ⓒ
8. ALL DIMENSIONS ARE FOR REFERENCE
   UNLESS TOLERANCED OR NOTED OTHERWISE

CABLE FLEX CHARACTERISTICS Ⓒ

TORSIONAL FLEX TEST	10 MILLION CYCLES PER MIL-C-13777G
BEND FLEX TEST	10 MILLION CYCLES PER MIL-C-13777G
WELD SLAG RESISTANCE	WOODHEAD STANDARD S-300

9	WRAP LABEL	VINYL	BLACK/YELLOW	Ⓒ
8	O-RING	VITON	RED	
7	COUPLER	BRASS	TEFLON/NICKEL	
6	CONTACT SOCKET	COPPER ALLOY	GOLD OVER NICKEL	
5	INSERT (FEMALE)	PUR	BLACK	
4	CONTACT PIN	COPPER ALLOY	GOLD OVER NICKEL	
3	INSERT (MALE)	PUR	BLACK	
2	OVERMOLD	TPC	YELLOW	Ⓒ
1	CABLE #18/4-5 AWG	TPE JACKET	YELLOW	
ITEM	DESCRIPTION	MATERIAL	FINISH	

PART NO. MATRIX Ⓒ

884031K03M003

POLES (4 & 5)

FINISHED LENGTH
M005 = 0.5 METER
M010 = 1 METER
M100 = 10 METER

Ⓒ

CABLE LENGTH TOLERANCES
<.3M [1FT]: +19mm-0 [+.75in-0]
.3 - .9M [1 - 3FT]: +44.5mm-0 [+1.75in-0]
.9 - 1.8M [3 - 6FT]: +55.6mm-0 [+2.19in-0]
1.8 - 3.7M [6 - 12FT: +88.9mm-0 [+3.50in-0]
3.7 - 7.3M [12 - 24FT]: +165.1mm-0 [+6.50in-0]
7.3-14.6M [24 - 48FT]: +317.5mm-0 [+12.50in-0]
14.6 - 30.5M [48-100FT]: +622.3mm-0 [+24.50in-0]
OVER 30M [100FT] +2% OF FINISHED LENGTH

THIS DRAWING CONTAINS INFORMATION THAT IS PROPRIETARY TO MOLEX ELECTRONIC TECHNOLOGIES, LLC AND SHOULD NOT BE USED WITHOUT WRITTEN PERMISSION

FUNCTIONAL SYMBOLS: FA=0, FC=0, FP=0
DIVISIONAL SYMBOLS

DIMENSION UNITS: INCH/MM
SCALE: NTS

GENERAL TOLERANCES (UNLESS SPECIFIED)

	mm	INCH
4 PLACES	±----	±----
3 PLACES	±----	±----
2 PLACES	±----	±----
1 PLACE	±----	±----
0 PLACES	±----	±----
ANGULAR TOL ±	---- °	

DRAFT WHERE APPLICABLE MUST REMAIN WITHIN DIMENSIONS

CURRENT REV DESC: ITEM #2 WAS TPE. ITEM #9 WAS MYLAR. REMOVED 3 POLE DETAILS. ADDED UL, CSA, TOL CHART & CABLE DIA. MODIFIED PN CHART & FACE VIEWS

EC NO: 669893
DRWN: ABENJAMINLW 2021/06/30
CHK'D: RSTONE 2021/07/12
APPR: BWOODMAN 2021/07/14

INITIAL REVISION:
DRWN: LSTEMMLE 2010/02/01
APPR: FPACHER 2010/02/03

molex

MICRO-CHANGE CORDSET, M12
4-5 POLE, FEMALE 90DEG - MALE STRAIGHT,
SINGLE KEY, #18 AWG TPE HI-FLEX

PRODUCT CUSTOMER DRAWING

DOCUMENT NUMBER	DOC TYPE	DOC PART	REVISION
SD-120066-021	PSD	001	C

THIRD ANGLE PROJECTION	DRAWING	SERIES	MATERIAL NUMBER	CUSTOMER	SHEET NUMBER
	A3-SIZE	120066	SEE CHART	GENERAL MARKET	1 OF 1

DOCUMENT STATUS	P1	RELEASE DATE	2021/07/14 21:16:12

FORMAT: ACAD-tb-prod-A3
REVISION: B
DATE: 2020/01/14