KYCON, Inc. 305 Digital Drive, Morgan Hill, CA 95037 (408)494-0330

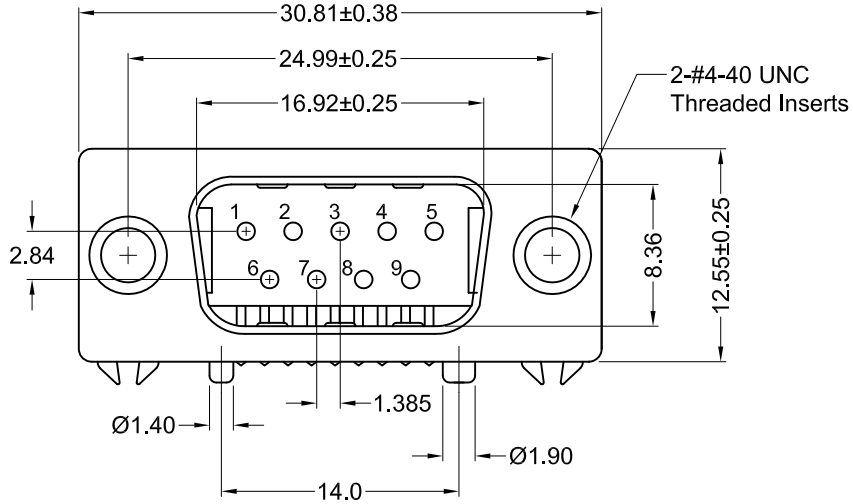

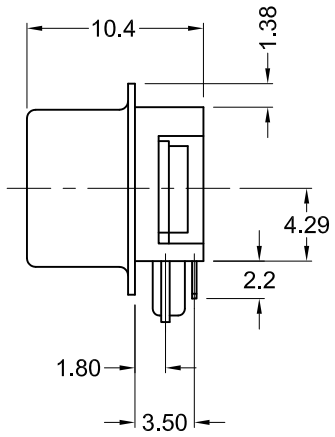

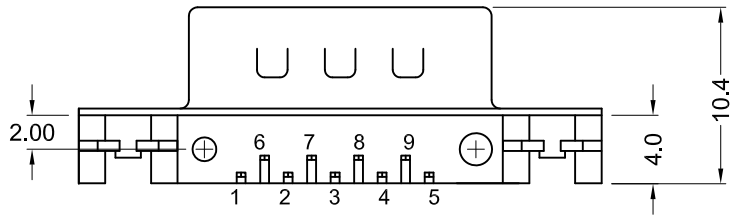

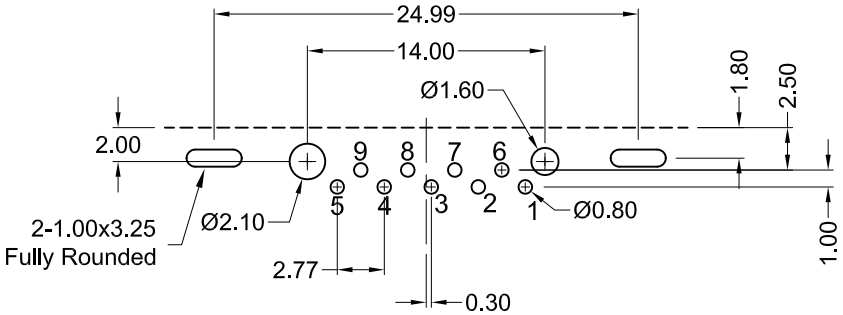

Recommended PCB Layout
(Top View)

Material and Finish

Insulator: PBT Thermoplastic
with Glass-fiber Reinforcement,
UL 94V-0 Rated,
Color: Black

Shell: Steel, Nickel Plated

Contact Material:
Plug - Phosphor Bronze

Contact Plating Options:

Standard: Gold Flash on
Mating End, Tin on
Termination End, Nickel
Underplate on Entire Contact

15 Option: 15u" Gold on
Mating End, Tin on
Termination End, Nickel
Underplate on Entire Contact

30 Option: 30u" Gold on
Mating End, Tin on
Termination End, Nickel
Underplate on Entire Contact

Electrical Specifications

Rated Current: 2A

Rated Voltage: 30V RMS

Insulation Resistance:
1000 Megohms Min. at 500V DC

Contact Resistance:
13 milliohms Max.

Dielectric Withstanding Voltage:
1000V for 1 Minute

Mechanical Specifications

Operating Temperature:
-55°C to +105°C

Part Number	Contact Area Plating Finish
K31X-E9P-N	Gold Flash (Standard)
K31X-E9P-N15	15u" Gold (15 Option)
K31X-E9P-N30	30u" Gold (30 Option)

RoHS COMPLIANT

C US
LR78160

Tolerances
X.X ± 0.25
X.XX ± 0.15
Unless Stated Otherwise

REV.	DATE	DESCRIPTION	REV. BY	CHK. BY
A1	07/07/05	New Drawing	R. Aguirre	H. MA
A2	3/6/08	ECO #07-051	S. Vien	H. MA
A3	10/01/12	ECO #12-052	S. Vien	P. DalCanto
A4	12/31/17	ECO #17-041	G. Serrato	C. Furumasu

DRAWN BY	DATE
R. Aguirre	7/07/05
	UNITS
	mm

K31X-E9P-N

D-Sub, 9 Pin, Plug, RoHS Compliant

Ultra Compact Footprint

KYCON