MATERIAL NUMBER	ENGINEERING NUMBER
1300360008	DN6000

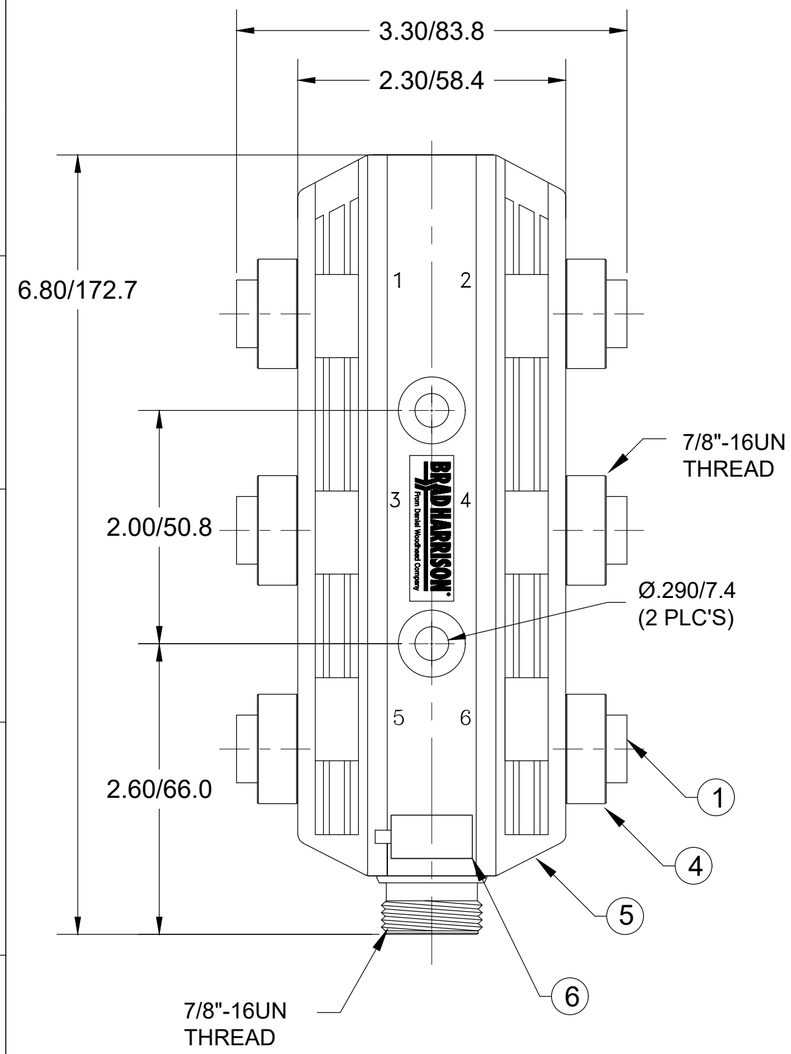

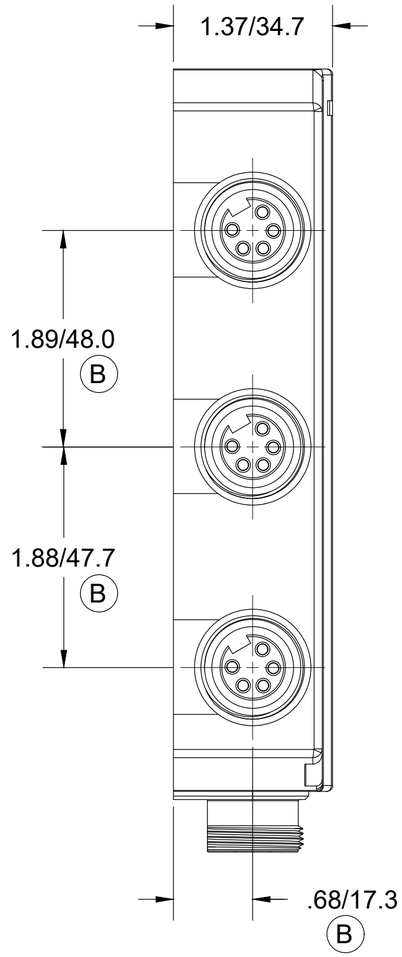

SCHEMATIC

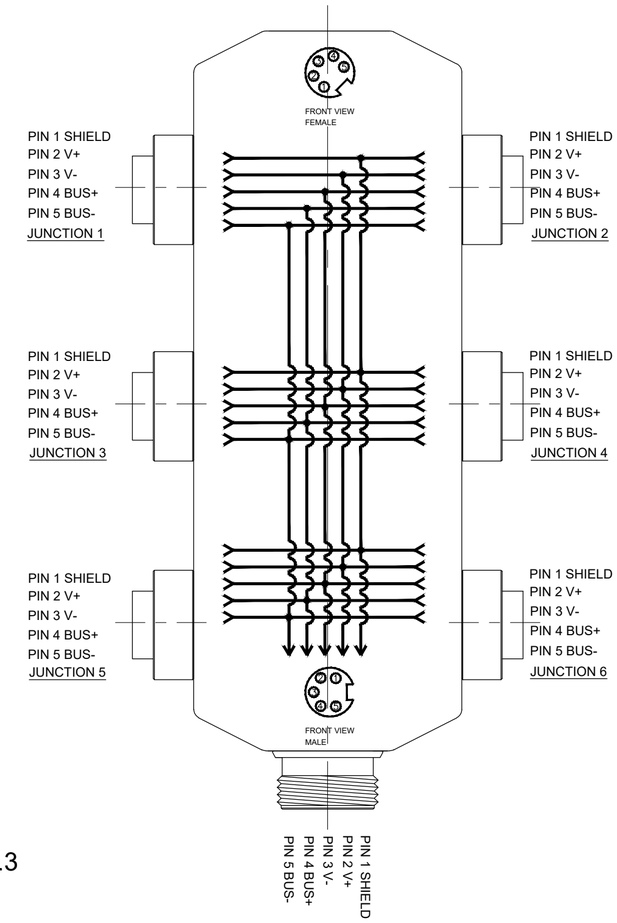

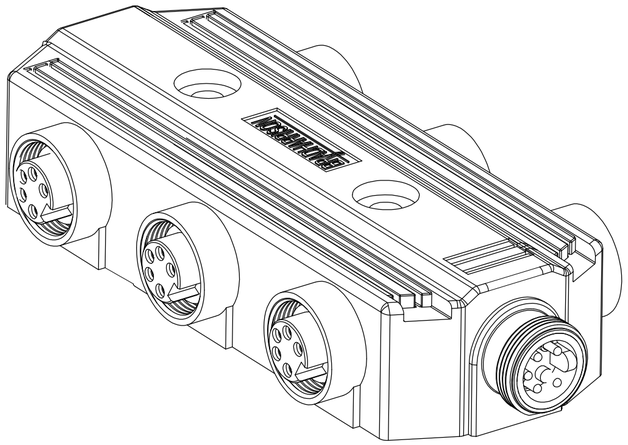

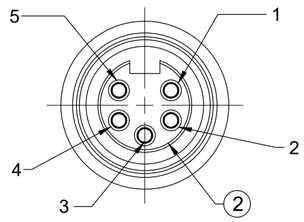

FEMALE FACE VIEW

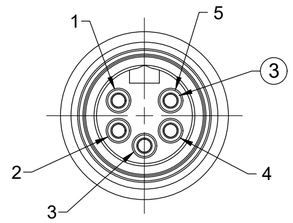

MALE FACE VIEW

NOTES:

1. MATERIAL: AS NOTED
2. FINISH: AS NOTED
3. ELECTRICAL:
   VOLTAGE RATING: 120 VAC/VDC
   CURRENT: 7A
4. TEMP RATING: 0° TO +60°C
5. PROTECTION: IP67 (WHEN MATED)
6. COUPLING THREAD- AS NOTED
7. UL LISTED FILE: E152210 (B)
   CSA CERTIFIED FILE: LR6837
8. ALL DIMENSIONS ARE FOR REFERENCE
   UNLESS TOLERANCED OR NOTED OTHERWISE

ITEM	COMPONENT	MATERIAL	FINISH
1	INSERT	TPE	GRAY (B)
2	CONTACT SOCKET	COPPER ALLOY	GOLD OVER NICKEL
3	CONTACT PIN	COPPER ALLOY	GOLD OVER NICKEL
4	RECEPTACLE SHELL	ZINC DIE CAST	BLACK E-COATED
5	HOUSING	PBT	BLACK
6	LABEL	ABS	WHITE
	POTTING MATERIAL	EPOXY	BLACK

DOCUMENT STATUS	P1	RELEASE DATE	2020/10/23 13:29:06

THIS DRAWING CONTAINS INFORMATION THAT IS PROPRIETARY TO MOLEX ELECTRONIC TECHNOLOGIES, LLC AND SHOULD NOT BE USED WITHOUT WRITTEN PERMISSION

FUNCTIONAL SYMBOLS: FA=0, FC=0, FP=0
DIVISIONAL SYMBOLS

DIMENSION UNITS	SCALE
INCH/MM	NTS

GENERAL TOLERANCES (UNLESS SPECIFIED)

	mm	INCH
4 PLACES	±----	±----
3 PLACES	±----	±----
2 PLACES	±----	±----
1 PLACE	±----	±----
0 PLACES	±----	±----
ANGULAR TOL ±	---- °	

DRAFT WHERE APPLICABLE MUST REMAIN WITHIN DIMENSIONS

CURRENT REV DESC: ITEM#1 WAS PVC. ADDED UL FILE NO & CSA. ADDED DIMS

EC NO: 645633
DRWN: ABENJAMINLW 2020/09/09
CHK'D: RSTONE 2020/09/29
APPR: BWOODMAN 2020/10/23

INITIAL REVISION:
DRWN: BWOODMAN 2009/07/06
APPR: JFMURPHY 2009/07/20

THIRD ANGLE PROJECTION

molex

MINI-CHANGE MPIS, A SIZE,
5 POLE, FEMALE-MALE, 6 PORT DROP,
SINGLE KEY, 18 AWG, DEVICENET

PRODUCT CUSTOMER DRAWING

DOCUMENT NUMBER	DOC TYPE	DOC PART	REVISION
SD-130036-002	PSD	001	B

DRAWING	SERIES	MATERIAL NUMBER	CUSTOMER	SHEET NUMBER
C-SIZE	130036	SEE CHART	GENERAL MARKET	1 OF 1

FORMAT: IN-ACAD-tb-prod-C
REVISION: B
DATE: 2020/01/14