KYCON, Inc. 305 Digital Drive, Morgan Hill, CA 95037 (408)494-0330

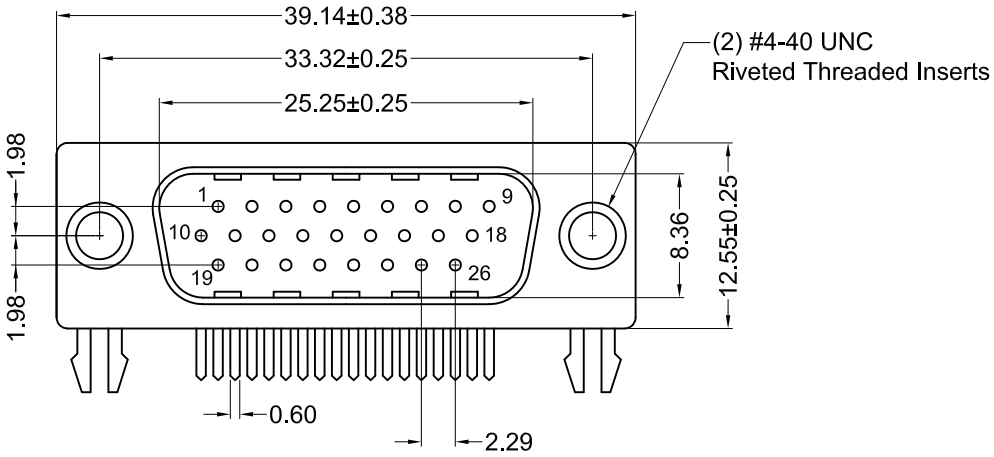

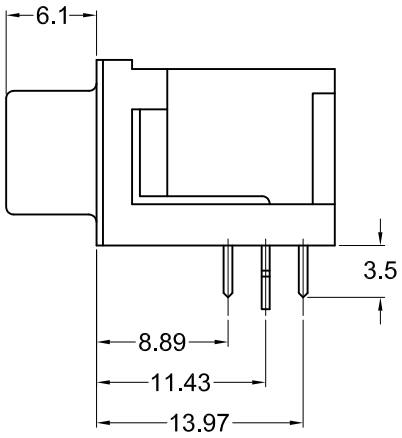

Material and Finish

Shell: Steel, Nickel Plated

Insulator: PBT thermoplastic with glass-fiber reinforcement, UL94V-0 rated
Color: Black

Contact Material:
Plug - Brass

Contact Plating Options:

Standard: gold flash on mating end, tin on termination end, nickel underplate on entire contact

15 Option: 15u" gold on mating end, tin on termination end, nickel underplate on entire contact

30 Option: 30u" gold on mating end, tin on termination end, nickel underplate on entire contact

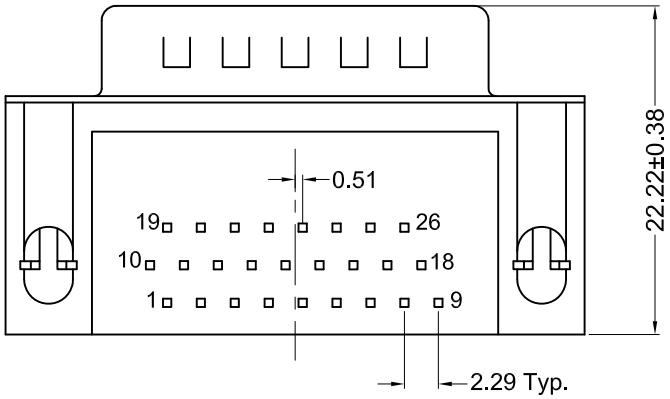

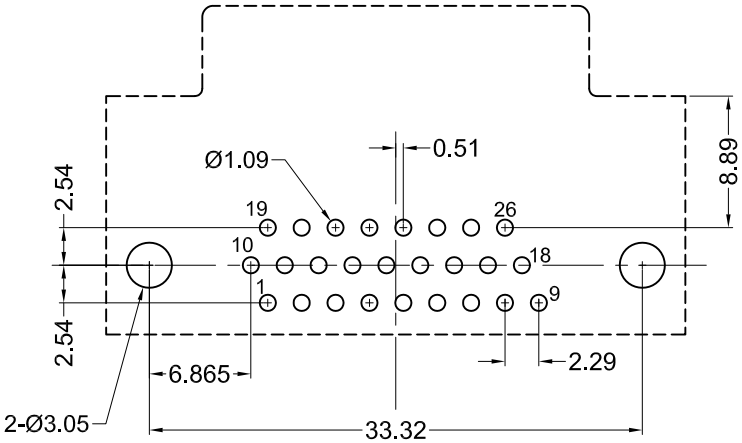

Recommended PCB Layout
(Bottom View)

Electrical Specifications

Rated Current: 1.5A

Rated Voltage: 29 Vac

Insulation Resistance:
more than 1000 megohms at 500V DC

Contact Resistance:
13 milliohms max.

Dielectric Strength:
1000V for 1 minute

Durability Rating:
500 mating cycles min.

Operating Temperature:
-55°C to +75°C

Part Number	Contact Area Plating Finish
K66X-A26P-N	Gold Flash (standard)
K66X-A26P-N15	15u" Gold (15 option)
K66X-A26P-N30	30u" Gold (30 option)

RoHS COMPLIANT

E140125 LR78160

Tolerances
X.X ± 0.25
X.XX ± 0.15
Unless Stated Otherwise

REV.	DATE	DESCRIPTION	REV. BY	CHK. BY
A1	12/14/05	New Drawing	R. Aguirre	H. MA
A2	02/27/08	ECO # 07-049	S. Vien	H. Ma
A3	12/11/08	ECO #08-084	S. Vien	H. MA
A4	06/04/14	ECO #14-027	H. MA	P. DalCanto
A5	02/17/16	ECO #15-019	H. MA	W. Cook
A6	12/31/17	ECO #17-028	J. Elbanna	C. Furumasu

DRAWN BY	DATE
R. Aguirre	10/05/05
UNITS	
mm	

K66X-A26P-N

High Density D-Sub, RoHS Compliant

Male, 26 Pos., Grounding Board Locks

KYCON