MATERIAL NO.	ENGINEERING NO.	FINISHED LENGTH
1300060156	102002A01F030	3 FT. (0.91 M)
1300060162	102002A01F120	12 FT. (3.66 M)
1300060168	102002A01F200	20 FT. (6.10 M)

CABLE LENGTH TOLERANCES
<.3M [1FT]: +19mm-0 [+.75in-0]
.3 - .9M [1 - 3FT]: +44.5mm-0 [+1.75in-0]
.9 - 1.8M [3 - 6FT]: +55.6mm-0 [+2.19in-0]
1.8 - 3.7M [6 - 12FT: +88.9mm-0 [+3.50in-0]
3.7 - 7.3M [12 - 24FT]: +165.1mm-0 [+6.50in-0]
7.3-14.6M [24 - 48FT]: +317.5mm-0 [+12.50in-0]
14.6 - 30.5M [48-100FT]: +622.3mm-0 [+24.50in-0]
OVER 30M [100FT] +2% OF FINISHED LENGTH

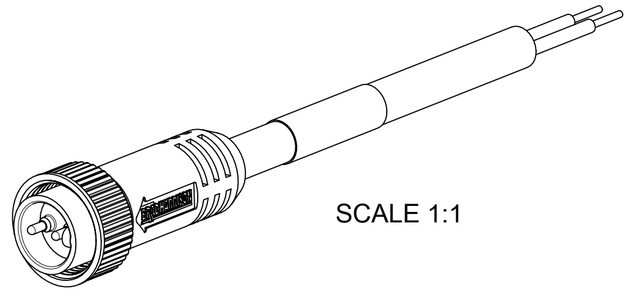

SCALE 1:1

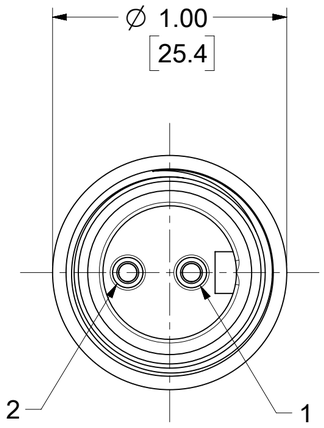

MALE FACE VIEW

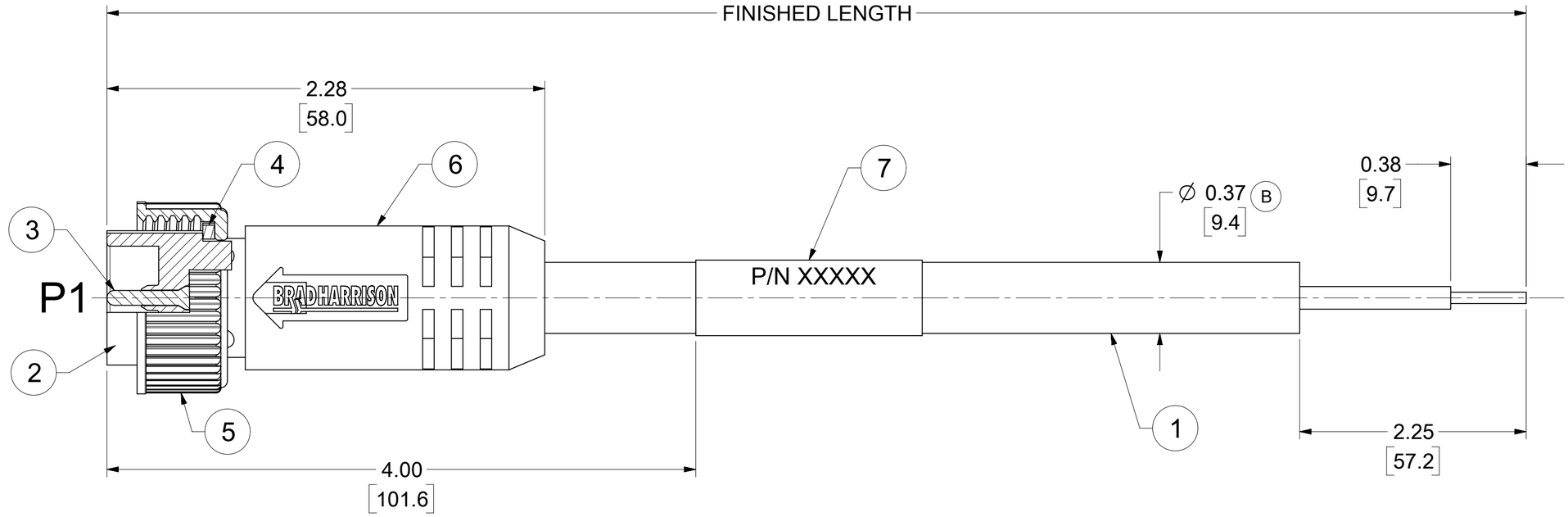

NOTES:
1. MATERIAL: AS NOTED
2. FINISH: AS NOTED
3. ELECTRICAL:
   VOLTAGE: 500V PER IEC60664
   600V PER UL2238 (B)
   CURRENT: 13A
4. TEMP RATING: -20°C TO +105°C (B)
5. PROTECTION: IP67 (WHEN MATED)
6. CSA CERTIFIED FILE: LR6837 (B)
7. UL RECOGNIZED FILE: E152210
8. COUPLING THREAD: 7/8-16UN
9. ALL DIMS ARE FOR REFERENCE UNLESS TOLERANCED OR NOTED OTHERWISE

WIRING DIAGRAM

P1

1	WHITE
2	BLACK

PART NUMBER LEGEND (B)

102002A01F030

FINISHED LENGTH
F001= .1 FT
F020= 2 FT
F200= 20 FT

ITEM	DESCRIPTION	MATERIAL	FINISH	
7	WRAP LABEL	VINYL	BLACK/YELLOW	(B)
6	OVERMOLD	TPE	YELLOW	(B)
5	COUPLING NUT	ZINC DIE CAST	BLACK E-COAT	
4	FRICTION RING	NYLON	WHITE	
3	PIN CONTACT	Cu ALLOY	GOLD OVER NICKEL	
2	INSERT	TPE	YELLOW	(B)
1	#16-2 CABLE, STOOW/ST	PVC JACKET	YELLOW	

DOCUMENT STATUS | P1 | RELEASE DATE | 2022/04/08 14:05:51

FUNCTIONAL SYMBOLS
FA = 0
FC = 0
FP = 0
DIVISIONAL SYMBOLS

DIMENSION UNITS: INCH/MM
SCALE: 2:1

GENERAL TOLERANCES (UNLESS SPECIFIED)

	MM	INCH
4 PLACES	±	±
3 PLACES	±	± 0.005
2 PLACES	±	± 0.01
1 PLACE	±	± 0.02
0 PLACES	±	±
ANGULAR TOL	± 0.5 °	

DRAFT WHERE APPLICABLE MUST REMAIN WITHIN DIMENSIONS

THIS DRAWING CONTAINS INFORMATION THAT IS PROPRIETARY TO MOLEX ELECTRONIC TECHNOLOGIES, LLC AND SHOULD NOT BE USED WITHOUT WRITTEN PERMISSION

CURRENT REV DESC: ITEM # 2 & 6 WERE PVC 7 WAS PLASTIC FILM, CABLE DIA. AND MATERIAL P/N TABLE . ADDED CSA, UL, IEC VOLT, TEMP RATING, IP RATING, TOL. CHART AND PART NUMBER LEGEND

EC NO: 701162
DRWN: AKABADI 2021/11/02
CHK'D: RSTONE 2022/03/30
APPR: BWOODMAN 2022/04/08

INITIAL REVISION:
DRWN: LHARTMANN 2009/06/05
APPR: JFMURPHY 2009/06/08

THIRD ANGLE PROJECTION | DRAWING: C-SIZE | SERIES: 130006

molex

MINI-CHANGE CORDSET, A SIZE
2 POLE, MALE, STRAIGHT, SINGLE KEY, 16AWG

PRODUCT CUSTOMER DRAWING

DOCUMENT NUMBER	DOC TYPE	DOC PART	REVISION
SD-130006-002	PSD	001	B

MATERIAL NUMBER	CUSTOMER	SHEET NUMBER
SEE TABLE	GENERAL MARKET	1 OF 1

FORMAT: Eng-tega-master-tb-prod-C
REVISION: E1
DATE: 2021/05/01