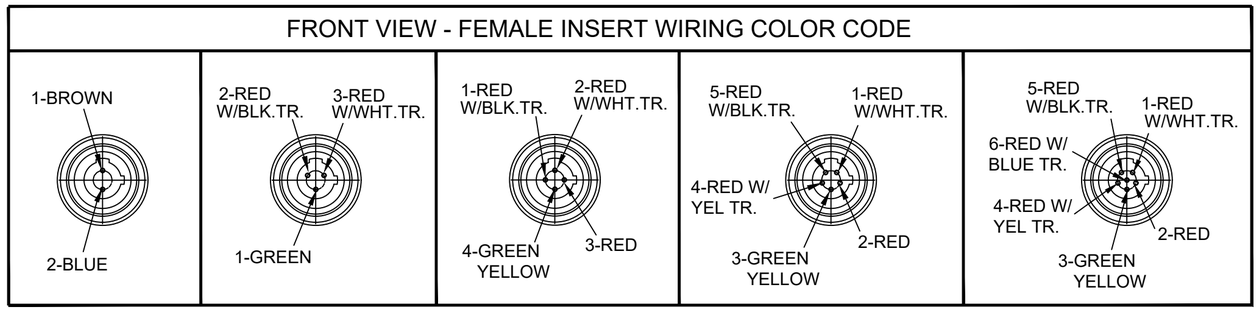

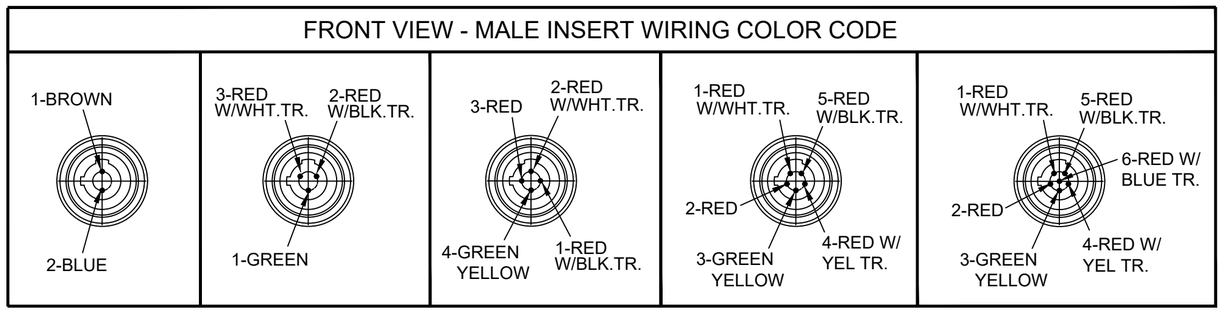

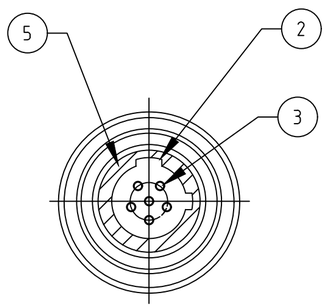

FEMALE FACE VIEW
2X SCALE

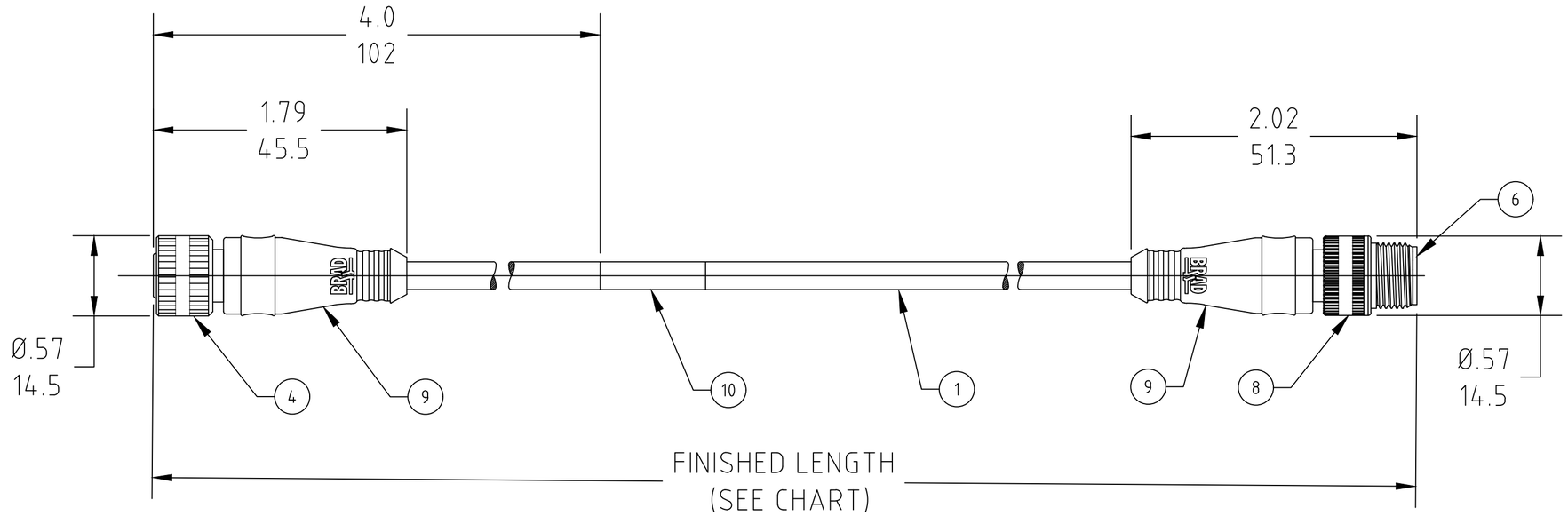

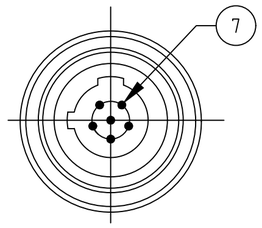

MALE FACE VIEW
2X SCALE

NOTES:
1. MATERIAL: AS NOTED
2. FINISH: AS NOTED
3. ELECTRICAL:
   VOLTAGE: 250V
   CURRENT: 4A
4. TEMP RATING: -25°C TO +105°C
5. PROTECTION: IP67 (WHEN MATED)
6. COUPLING THREAD: 1/2-20
7. UL LISTED FILE: E152210
   CSA CERTIFIED FILE: LR6837
8. ALL DIMS ARE FOR REFERENCE UNLESS TOLERANCED OR NOTED OTHERWISE

PART NUMBER LEGEND

(A1) 773030D02F030

POLE COUNT

FINISHED LENGTH:
F010= 1.0 FEET
F100= 10.0 FEET
M005= 0.5 METER
M010= 1.0 METER
M100= 10. METER

PART NO.	POLES	ENGINEERING NO.	FINISHED LENGTH	CABLE DIA.
1200730057	2	772030D02F030	3.0 FT [0.9M]	.20 [5.1]
1200730102	3	773030D02F060	6.0 FT [1.8M]	.23 [5.7]
1200730223	4	774030D02F120	12 FT [3.7M]	.22 [5.6]
1200730300	5	775030D02F200	20 FT [6.1M]	.24 [6.1]
1200730371	6	776030D02F300	30 FT [9.1M]	.25 [6.4]

CABLE LENGTH TOLERANCES
>.3M [1FT]: +19mm-0 [+.75in-0]
.3 - .9M [1 - 3FT]: +44.5mm-0 [+1.75in-0]
.9 - 1.8M [3 - 6FT]: +55.6mm-0 [+2.19in-0]
1.8 - 3.7M [6 - 12FT: +88.9mm-0 [+3.50in-0]
3.7 - 7.3M [12 - 24FT]: +165.1mm-0 [+6.50in-0]
7.3-14.6M [24 - 48FT]: +317.5mm-0 [+12.50in-0]
14.6 - 30.5M [48-100FT]: +622.3mm-0 [+24.50in-0]
OVER 30M [100FT] +2% OF FINISHED LENGTH

ITEM	DESCRIPTION	MATERIAL	FINISH
10	FLAG LABEL	VINYL	BLACK/YELLOW
9	OVERMOLDS	TPC	YELLOW
8	COUPLING, MALE	ZINC DIE-CAST	BLACK
7	CONTACT PIN	COPPER ALLOY	GOLD PLATED
6	MALE INSERT	NYLON	BLACK
5	O-RING	VITON	RED
4	COUPLING, FEMALE	ZINC DIE-CAST	BLACK
3	CONTACT SOCKET	COPPER ALLOY	GOLD PLATED
2	FEMALE INSERT	NYLON	BLACK
1	CABLE, 22AWG , SHIELDED	TPE JACKET	BLACK

DOCUMENT STATUS	P1	RELEASE DATE	2021/01/09 00:51:27

THIS DRAWING CONTAINS INFORMATION THAT IS PROPRIETARY TO MOLEX ELECTRONIC TECHNOLOGIES, LLC AND SHOULD NOT BE USED WITHOUT WRITTEN PERMISSION

SYMBOLS: EA = 0; EC = 0; EP = 0; S = 0; = 0; C = 0; = 0; = 0; = 0

DIMENSION UNITS: INCH/MM
SCALE: 1:1

GENERAL TOLERANCES (UNLESS SPECIFIED)

	mm	INCH
4 PLACES	±----	±----
3 PLACES	±----	±----
2 PLACES	±----	±----
1 PLACE	±----	±----
0 PLACES	±----	±----
ANGULAR TOL	± ---- °	

DRAFT WHERE APPLICABLE MUST REMAIN WITHIN DIMENSIONS

CURRENT REV DESC: CORRECTED P/N LEGEND

EC NO: 652524
DRWN: RSTONE 2021/01/06
CHK'D: ALEON01 2021/01/08
APPR: BWOODMAN 2021/01/09

INITIAL REVISION:
DRWN: LSTEMMLE 2010/02/08
APPR: FPACHER 2010/02/10

THIRD ANGLE PROJECTION
DRAWING: C-SIZE
SERIES: 120073

molex

MICRO-CHANGE FEM/ STR
2-6 POLE DUAL KEYWAY SHIELDED PVC CABLE

PRODUCT CUSTOMER DRAWING

DOCUMENT NUMBER	DOC TYPE	DOC PART	REVISION
SD-120073-001	PSD	001	A1

MATERIAL NUMBER:
CUSTOMER: GENERAL MARKET
SHEET NUMBER: 1 OF 1

FORMAT: IN-ACAD-tb-prod-C
REVISION: A1
DATE: 2019/06/12