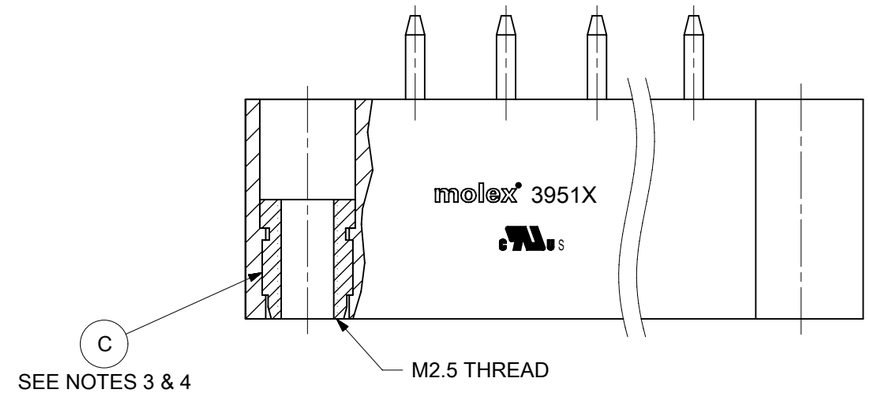

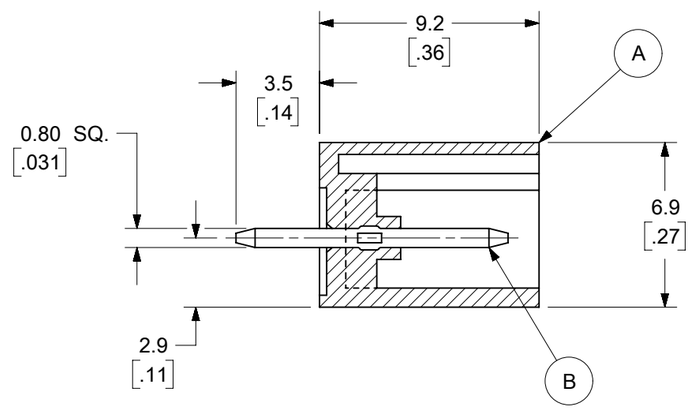

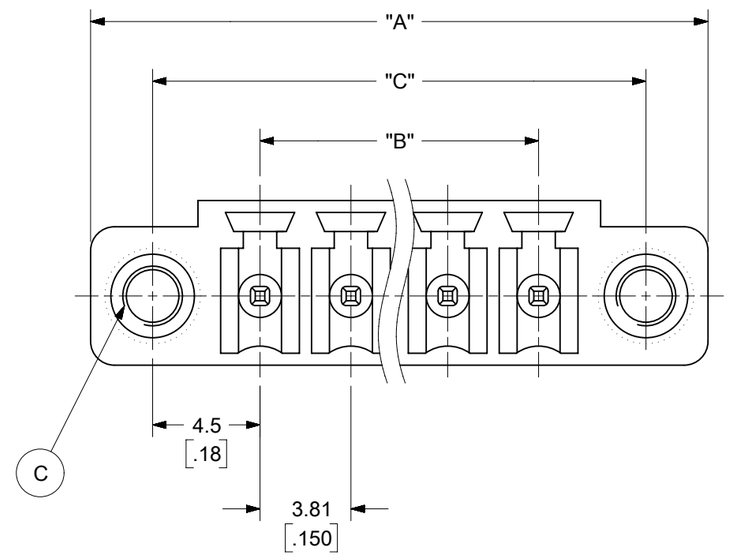

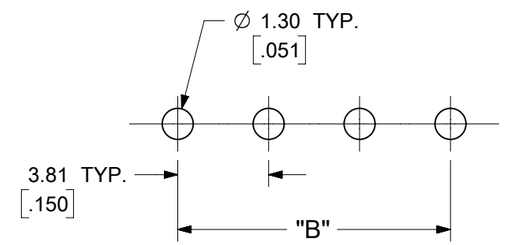

PCB LAYOUT

SPECIFICATIONS:

1. MATERIAL:
   (A). BODY: PA66, UL 94V-0
   (B). TERMINAL: BRASS - TIN PLATED
   (C). THREADED INSERT: BRASS
2. ELECTRICAL RATING: 300V, 8A
3. MAX TORQUE: 1.59 in.lbs. (0.18NM)
4. MINIMUM INSERT RETENTION: 22 lbf (98N)
5. OPERATING TEMPERATURE: -40°C to +105°C
6. MAX. SOLDERING TEMP: 260°C (500°F) FOR 5 SECONDS
7. DIM A (OVERALL LENGTH)= (N x P) + 10.39mm
8. DIM B (CIRCUIT LENGTH)= (N - 1) x P
9. DIM C (MOUNTING HOLES)= (B + 9mm)
10. P (PITCH) = 3.81mm (.150")
11. N = NUMBER OF POSITIONS AVAILABLE 2 THROUGH 20
12. PRODUCT SPEC: PS-39500-001
13. SEE DRAWING SD-39501-002 FOR PTH INFO
14. DIMS. SHOWN ARE FOR REFERENCE ONLY.

TOLERANCES			
MM	TOL	INCH	TOL
0-6	±0.25	0-.24	±.010
>6-30	±0.40	.24-1.18	±.016
>30-120	±0.50	1.18-4.76	±.020
>120	±0.80	>4.76	±.031

SYMBOLS: = 0 (4 places); = 0 (3 places); = 0 (2 places); = 0 (1 place); = 0 (0 places); = 0; = 0; = 0

THIS DRAWING CONTAINS INFORMATION THAT IS PROPRIETARY TO MOLEX ELECTRONIC TECHNOLOGIES, LLC AND SHOULD NOT BE USED WITHOUT WRITTEN PERMISSION

DIMENSION UNITS	SCALE
MM/INCH	4:1

GENERAL TOLERANCES (UNLESS SPECIFIED)

	MM	INCH
4 PLACES	±	±
3 PLACES	±	± SEE CHART
2 PLACES	± SEE CHART	± SEE CHART
1 PLACE	± SEE CHART	±
0 PLACES	±	±
ANGULAR TOL	± °	

DRAFT WHERE APPLICABLE MUST REMAIN WITHIN DIMENSIONS

CURRENT REV DESC: MIGRATION TO ECTR/NX

EC NO: 619930
DRWN: ABENJAMINLW 2019/06/17
CHK'D: DACHAMMER 2019/07/01
APPR: JFMURPHY 2019/07/08

INITIAL REVISION:
DRWN: LROTHAUS 2006/01/09
APPR: JPAWLICK 2006/01/10

THIRD ANGLE PROJECTION | DRAWING: B-SIZE | SERIES: 39515

molex

3.81MM, EURO HEADER
VERTICAL, MOUNTING ENDS

PRODUCT CUSTOMER DRAWING

DOCUMENT NUMBER	DOC TYPE	DOC PART	REVISION
SD-39515-001	PSD	001	B2

MATERIAL NUMBER	CUSTOMER	SHEET NUMBER
SEE SHEET-2	GENERAL MARKET	1 OF 2

DOCUMENT STATUS	P1	RELEASE DATE	2019/07/08 15:52:24

FORMAT: Eng-tega-portrait-prod-B
REVISION: D
DATE: 2018/01/18

DESCRIPTION	CIRCUIT SIZE	MATERIAL NUMBERS												DIMENSIONAL INFORMATION					
		BLACK						GREEN											
		100% TIN			30 u" GOLD			100% TIN			30 u" GOLD								
		PRINTING OPTIONS			PRINTING OPTIONS			PRINTING OPTIONS			PRINTING OPTIONS			DIM. "A"		DIM. "B"		DIM. "C"	
		None	10AV	11AV	None	10AV	11AV	None	10AV	11AV	None	10AV	11AV	mm	inch	mm	inch	mm	inch
3.81MM, EURO HEADER, VERTICAL, MOUNTING ENDS	2	395151002	395151302	395151402	395151502	395151802	395151902	395156002	395156302	395156402	395156502	395156802	395156902	18.01	.709	3.81	.150	12.81	.504
3.81MM, EURO HEADER, VERTICAL, MOUNTING ENDS	3	395151003	395151303	395151403	395151503	395151803	395151903	395156003	395156303	395156403	395156503	395156803	395156903	21.82	.859	7.62	.300	16.62	.654
3.81MM, EURO HEADER, VERTICAL, MOUNTING ENDS	4	395151004	395151304	395151404	395151504	395151804	395151904	395156004	395156304	395156404	395156504	395156804	395156904	25.63	1.009	11.43	.450	20.43	.804
3.81MM, EURO HEADER, VERTICAL, MOUNTING ENDS	5	395151005	395151305	395151405	395151505	395151805	395151905	395156005	395156305	395156405	395156505	395156805	395156905	29.44	1.159	15.24	.600	24.24	.954
3.81MM, EURO HEADER, VERTICAL, MOUNTING ENDS	6	395151006	395151306	395151406	395151506	395151806	395151906	395156006	395156306	395156406	395156506	395156806	395156906	33.25	1.309	19.05	.750	28.05	1.104
3.81MM, EURO HEADER, VERTICAL, MOUNTING ENDS	7	395151007	395151307	395151407	395151507	395151807	395151907	395156007	395156307	395156407	395156507	395156807	395156907	37.06	1.459	22.86	.900	31.86	1.254
3.81MM, EURO HEADER, VERTICAL, MOUNTING ENDS	8	395151008	395151308	395151408	395151508	395151808	395151908	395156008	395156308	395156408	395156508	395156808	395156908	40.87	1.609	26.67	1.050	35.67	1.404
3.81MM, EURO HEADER, VERTICAL, MOUNTING ENDS	9	395151009	395151309	395151409	395151509	395151809	395151909	395156009	395156309	395156409	395156509	395156809	395156909	44.68	1.759	30.48	1.200	39.48	1.554
3.81MM, EURO HEADER, VERTICAL, MOUNTING ENDS	10	395151010	395151310	395151410	395151510	395151810	395151910	395156010	395156310	395156410	395156510	395156810	395156910	48.49	1.909	34.29	1.350	43.29	1.704
3.81MM, EURO HEADER, VERTICAL, MOUNTING ENDS	11	395151011	395151311	395151411	395151511	395151811	395151911	395156011	395156311	395156411	395156511	395156811	395156911	52.30	2.059	38.10	1.500	47.10	1.854
3.81MM, EURO HEADER, VERTICAL, MOUNTING ENDS	12	395151012	395151312	395151412	395151512	395151812	395151912	395156012	395156312	395156412	395156512	395156812	395156912	56.11	2.209	41.91	1.650	50.91	2.004
3.81MM, EURO HEADER, VERTICAL, MOUNTING ENDS	13	395151013	395151313	395151413	395151513	395151813	395151913	395156013	395156313	395156413	395156513	395156813	395156913	59.92	2.359	45.72	1.800	54.72	2.154
3.81MM, EURO HEADER, VERTICAL, MOUNTING ENDS	14	395151014	395151314	395151414	395151514	395151814	395151914	395156014	395156314	395156414	395156514	395156814	395156914	63.73	2.509	49.53	1.950	58.53	2.304
3.81MM, EURO HEADER, VERTICAL, MOUNTING ENDS	15	395151015	395151315	395151415	395151515	395151815	395151915	395156015	395156315	395156415	395156515	395156815	395156915	67.54	2.659	53.34	2.100	62.34	2.454
3.81MM, EURO HEADER, VERTICAL, MOUNTING ENDS	16	395151016	395151316	395151416	395151516	395151816	395151916	395156016	395156316	395156416	395156516	395156816	395156916	71.35	2.809	57.15	2.250	66.15	2.604
3.81MM, EURO HEADER, VERTICAL, MOUNTING ENDS	17	395151017	395151317	395151417	395151517	395151817	395151917	395156017	395156317	395156417	395156517	395156817	395156917	75.16	2.959	60.96	2.400	69.96	2.754
3.81MM, EURO HEADER, VERTICAL, MOUNTING ENDS	18	395151018	395151318	395151418	395151518	395151818	395151918	395156018	395156318	395156418	395156518	395156818	395156918	78.97	3.109	64.77	2.550	73.77	2.904
3.81MM, EURO HEADER, VERTICAL, MOUNTING ENDS	19	395151019	395151319	395151419	395151519	395151819	395151919	395156019	395156319	395156419	395156519	395156819	395156919	82.78	3.259	68.58	2.700	77.58	3.054
3.81MM, EURO HEADER, VERTICAL, MOUNTING ENDS	20	395151020	395151320	395151420	395151520	395151820	395151920	395156020	395156320	395156420	395156520	395156820	395156920	86.59	3.409	72.39	2.850	81.39	3.204

TOLERANCES			
MM	TOL	INCH	TOL
0-6	±0.25	0-.24	±.010
>6-30	±0.40	.24-1.18	±.016
>30-120	±0.50	1.18-4.76	±.020
>120	±0.80	>4.76	±.031

SYMBOLS: = 0 / = 0 / = 0 / = 0 / = 0 / = 0 / = 0 / = 0

THIS DRAWING CONTAINS INFORMATION THAT IS PROPRIETARY TO MOLEX ELECTRONIC TECHNOLOGIES, LLC AND SHOULD NOT BE USED WITHOUT WRITTEN PERMISSION

DIMENSION UNITS: MM/INCH
SCALE: 2:1

GENERAL TOLERANCES (UNLESS SPECIFIED)

	MM	INCH
4 PLACES	±	±
3 PLACES	±	± SEE CHART
2 PLACES	± SEE CHART	± SEE CHART
1 PLACE	± SEE CHART	±
0 PLACES	±	±
ANGULAR TOL	± °	

DRAFT WHERE APPLICABLE MUST REMAIN WITHIN DIMENSIONS

CURRENT REV DESC: MIGRATION TO ECTR/NX

EC NO: 619930
DRWN: ABENJAMINLW 2019/06/17
CHK'D: DACHAMMER 2019/07/01
APPR: JFMURPHY 2019/07/08

INITIAL REVISION:
DRWN: LROTHAUS 2006/01/09
APPR: JPAWLICK 2006/01/10

THIRD ANGLE PROJECTION | DRAWING: B-SIZE | SERIES: 39515

molex

3.81MM, EURO HEADER
VERTICAL, MOUNTING ENDS

PRODUCT CUSTOMER DRAWING

DOCUMENT NUMBER	DOC TYPE	DOC PART	REVISION
SD-39515-001	PSD	001	B2

MATERIAL NUMBER	CUSTOMER	SHEET NUMBER
SEE TABLE	GENERAL MARKET	2 OF 2

DOCUMENT STATUS	P1	RELEASE DATE	2019/07/08 15:52:24

FORMAT: Eng-lega-portrait-prod-B
REVISION: D
DATE: 2018/01/18