KYCON, Inc. 305 Digital Drive, Morgan Hill, CA 95037 (408)494-0330

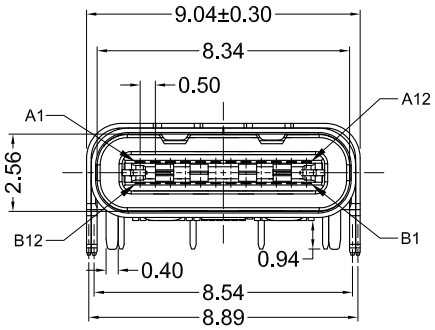

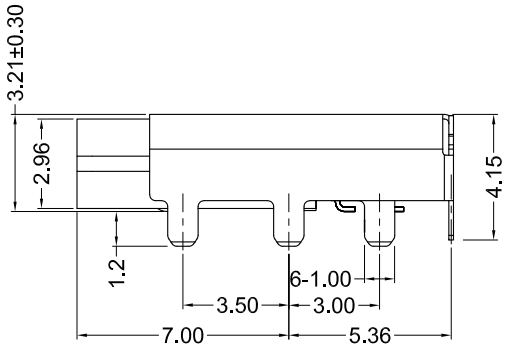

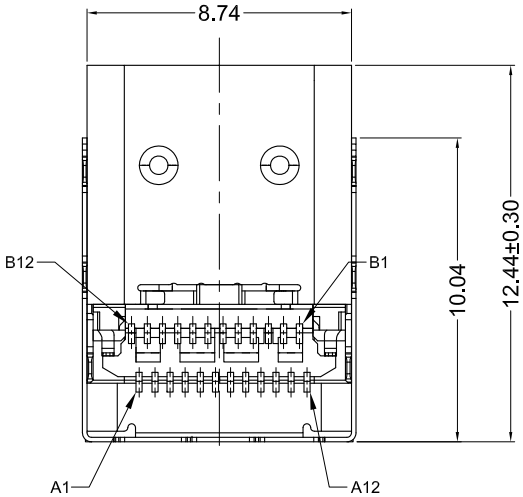

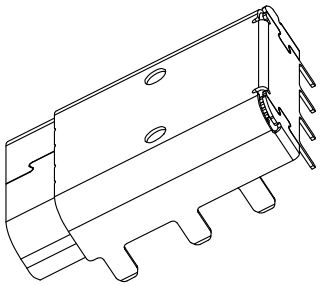

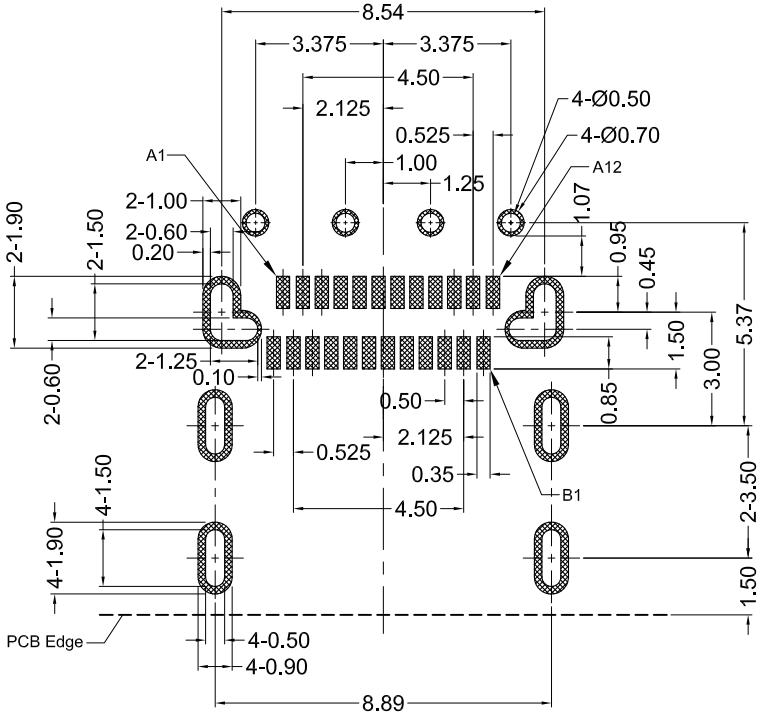

Recommended PCB Layout
(Top View)

Materials and Finish

Housing: High Temp Thermoplastic
UL 94V-0 Rated, Black Color

Shield: Stainless Steel, Nickel Plated

Contact Material:
Copper Alloy

Contact plating:
30u" Gold Plated on Contact Area,
Tin Plated on Solder Tails,
All over Nickel Underplate

Electrical Characteristics

Rated Current:
5.0A Inclusive (1.25A Ea.) For Pins
A4, A9, B4, and B9 (VBUS)
1.25A For pin A5 or B5 (VCONN)
6.25A Inclusive For Pins
A1, A12, B1, and B12 (GND)
0.25A For All Other Pins

Rated Voltage: 20V

Insulation Resistance:
100 Megohms Min. at 250V DC

Contact Resistance:
50 milliohms Max.

Dielectric Withstanding Voltage:
100V AC RMS for 1 Minute

USB Version: 3.1 Gen2 (10Gbps)

Mechanical Characteristics

Insertion Force: 0.4kg - 3.0kg

Withdrawal Force: 0.3kg - 3.0kg

Durability: 10000 Mating Cycles Min.

Operating Temperature:
-40°C to +85°C

RoHS COMPLIANT

Tolerances
X.X ± 0.30
X.XX ± 0.20
Unless Stated Otherwise

REV.	DATE	DESCRIPTION	REV. BY	CHK. BY
A0	11/11/15	New Drawing	W. Cook	H. MA
A1	11/11/15	Release Drawing	W. Cook	H. MA
A2	04/11/16	Update Specs	C. Kelleher	W. Cook
A3	11/03/16	Add PCB Dimensions	C. Kelleher	W. Cook
A4	11/07/18	ECO #18-058	G. Serrato	D. Shehan

DRAWN BY	DATE
W. Cook	08/24/15
UNITS	
mm	

KUSBX-SMT-CS4-B30TR

USB Type-C, All SMT Contacts

High Temp, RoHS Compliant

KYCON