MATERIAL NUMBER	ENGINEERING NUMBER	FINISHED LENGTH
120072-0551	705006D02F060	6.00' +3.50" -0 [1.8M +88.9 -0]
120072-0553	705006D02F120	12.00' +6.50" -0 [3.7M +165.1 -0]
120072-0555	705006D02F200	20.00' +6.50" -0 [6.1M +165.1 -0]

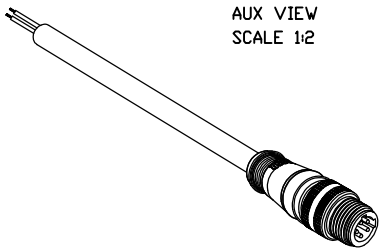

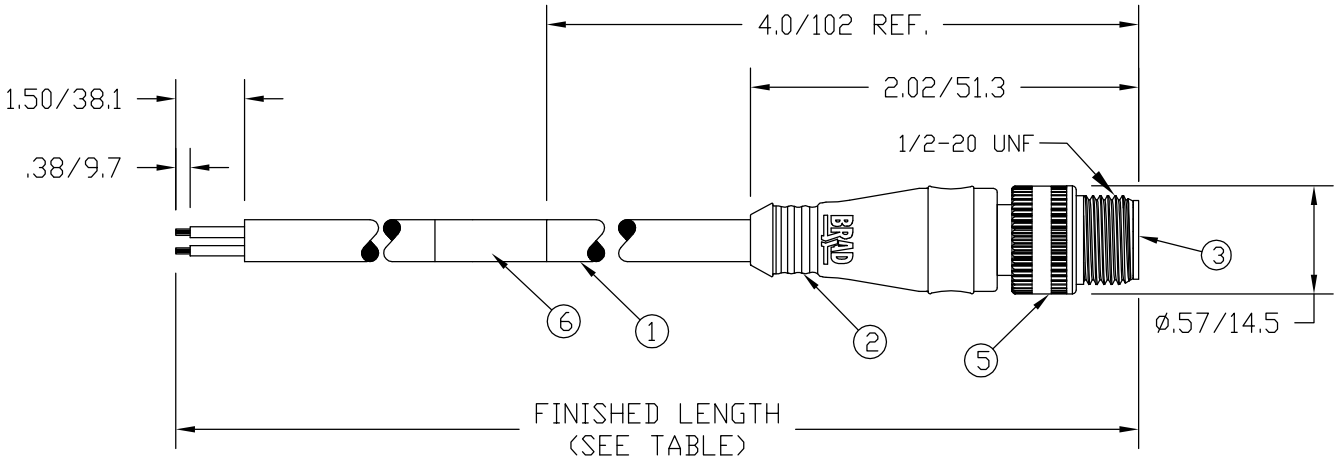

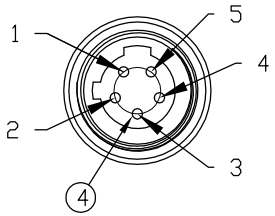

MALE FACE VIEW

1	RED-WHITE
2	RED
3	GREEN-GND
4	RED-YELLOW
5	RED-BLACK

WIRING DIAGRAM

NOTES:

1) MATERIALS: SEE TABLE

2) FINISHES: SEE TABLE

3) CABLE: #22/5 SHIELDED PVC

4) ELECTRICAL DATA:
MAX. VOLTAGE: 250 VAC/VDC
MAX. CURRENT 4 AMPS

5) ENVIRONMENTAL:
PROTECTION IP67
TEMPERATURE RANGE: -20°C TO 105°C

6) WRAP LABEL IS MARKED WITH P/N, DATE CODE, VOLTAGE & AMPERAGE.

7) ASSEMBLY IS RoHS COMPLIANT.

ITEM	QTY.	DESCRIPTION	MATERIAL	FINISH
6	1	LABEL	MYLAR	BLACK/YELLOW
5	1	COUPLER	ZINC DIE CAST	BLACK E-COAT
4	5	PIN CONTACT	COPPER ALLOY	GOLD OVER NICKEL
3	1	INSERT	NYLON	BLACK
2	1	OVERMOLD	PVC	YELLOW
1	1	#22/5 CABLE W/BRAID SHIELD	PVC JACKET	YELLOW

RELEASED DRAWING
EC NO: WEU2010-0017 7/17/09
DRWN: LHARTMAN 2009/07/29
CH'KD: BWOODMAN 2009/08/10
APPR: JFMURPHY
DESCRIPTION
REV A

QUALITY SYMBOLS
▼=0
(C)=0

GENERAL TOLERANCES (UNLESS SPECIFIED)

	mm	INCH
4 PLACES	±----	±----
3 PLACES	±----	±----
2 PLACES	±----	±.01
1 PLACE	±0.3	±----
ANGULAR ±----°		

DRAFT WHERE APPLICABLE MUST REMAIN WITHIN DIMENSIONS

DIMENSION STYLE: IN/MM
SCALE: 1:1
DESIGN UNITS: INCH
THIRD ANGLE PROJECTION

DRAWN BY: LHARTMAN DATE: 2009/07/17
CHECKED BY: BWOODMAN DATE: 2009/07/29
APPROVED BY: ---- DATE: ----

TITLE: MICRO-CHANGE CORDSET 5P MA ST DUAL KEY BRAID SHIELD PVC CABLE

molex MOLEX INCORPORATED

MATERIAL NO.: SEE TABLE
DOCUMENT NO.: SD-120072-007
SHEET NO.: 1 OF 1
SIZE: A

THIS DRAWING CONTAINS INFORMATION THAT IS PROPRIETARY TO MOLEX INCORPORATED AND SHOULD NOT BE USED WITHOUT WRITTEN PERMISSION