PART NUMBER	ENGINEERING NUMBER
1300680106	TC40140-200G

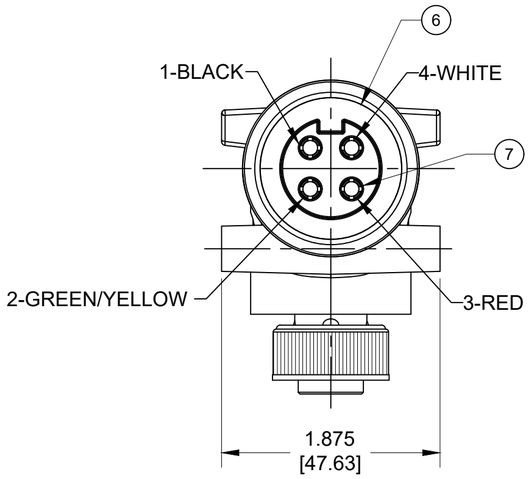

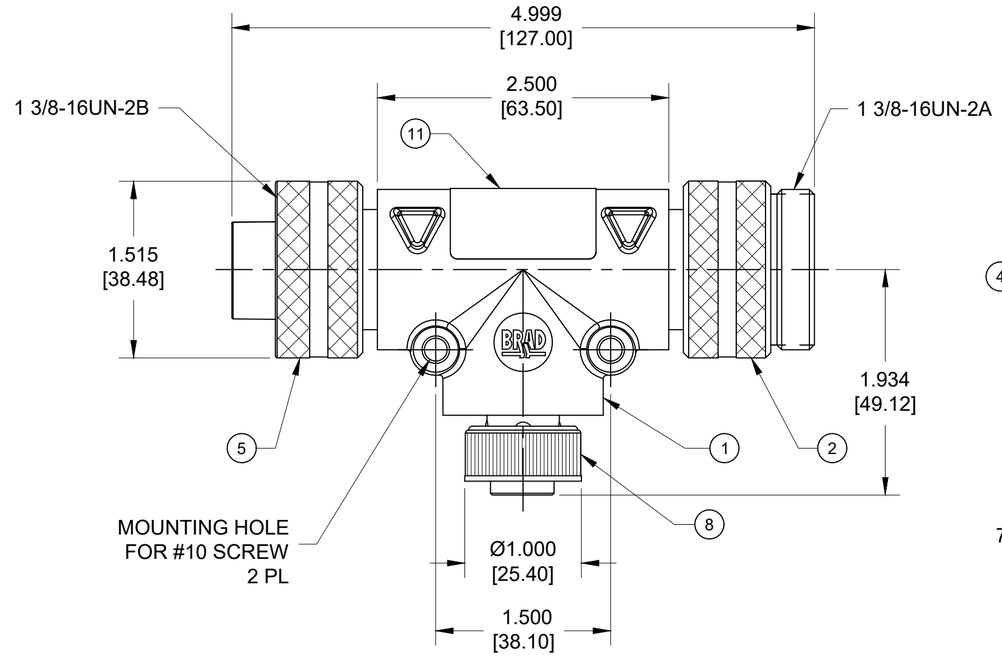

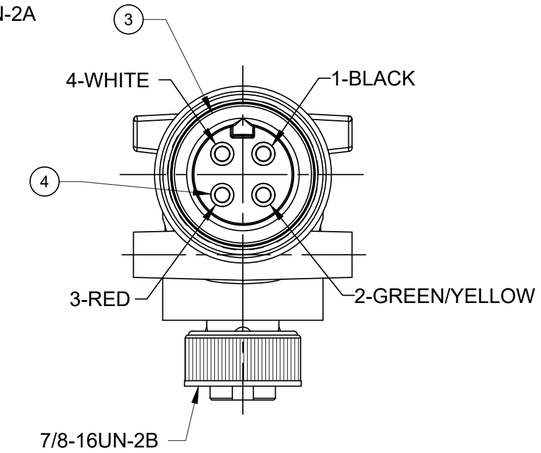

NOTE:

1. MATERIAL: AS NOTED
2. FINISH: AS NOTED
3. ELECTRICAL DATA:
   VOLTAGE: 483V PER IEC60664 (B)
   600V PER UL2237
   MAX. THRU CURRENT: 32A (B)
   MAX. DROP CURRENT: 15A
4. TEMPERATURE RANGE: -20°C TO +90°C
5. PROTECTION: IP67 (WHEN MATED)
6. UL LISTED FILE: E258922
7. PACKAGING:
   ASSEMBLIES ARE BAGGED SEPERATELY IN POLY BAGS WITH BAR CODE LABEL ATTACHED TO THE OUTSIDE OF THE BAG.
8. ASSEMBLY IS RoHS COMPLIANT
9. ALL DIMENSIONS ARE FOR REFERENCE UNLESS TOLERANCED OR NOTED OTHERWISE

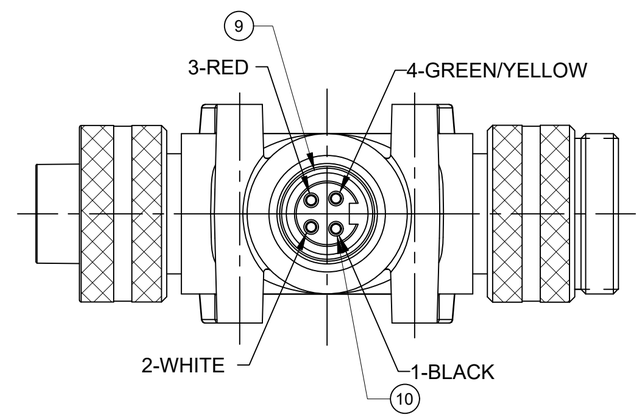

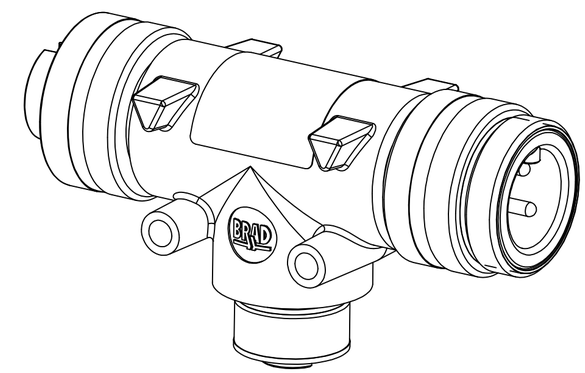

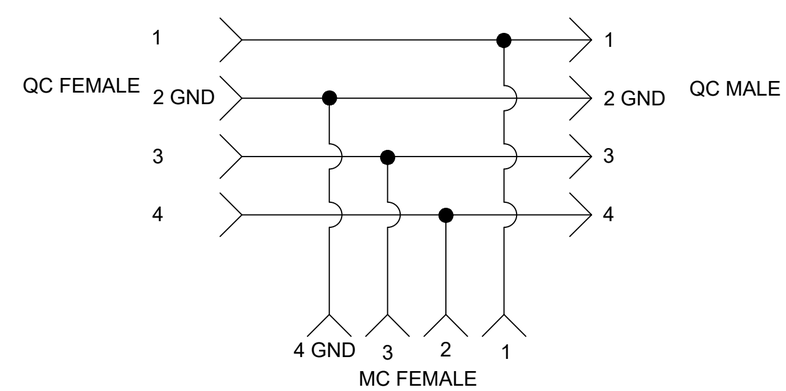

WIRE DIAGRAM

ITEM	QTY.	DESCRIPTION	MATERIAL	FINISH
11	1	LABEL	PLASTIC FILM	BLACK/YELLOW
10	4	MC SOCKET CONTACT	COPPER ALLOY	GOLD PLATED
9	1	MC FEMALE INSERT	TPE	BLACK
8	1	MC COUPLING NUT	ZINC ALLOY	BLACK E-COAT
7	4	QC SOCKET CONTACT	COPPER ALLOY	GOLD PLATED
6	1	QC FEMALE INSERT	TPE	BLACK
5	1	QC FEMALE COUPLING NUT	ALUMINUM	CLEAR ANODIZE
4	4	QC PIN CONTACT	COPPER ALLOY	GOLD PLATED
3	1	QC MALE INSERT	TPE	BLACK
2	1	QC MALE COUPLING NUT	ALUMINUM	CLEAR ANODIZE
1	1	OVERMOLD	TPE	BLACK

(B)

DOCUMENT STATUS	P1	RELEASE DATE	2021/05/05 18:57:02

THIS DRAWING CONTAINS INFORMATION THAT IS PROPRIETARY TO MOLEX ELECTRONIC TECHNOLOGIES, LLC AND SHOULD NOT BE USED WITHOUT WRITTEN PERMISSION

FUNCTIONAL SYMBOLS: FA=0, FC=0, FP=0

DIVISIONAL SYMBOLS

DIMENSION UNITS: INCH/MM
SCALE: NTS

GENERAL TOLERANCES (UNLESS SPECIFIED)

	mm	INCH
4 PLACES	±----	±----
3 PLACES	±----	±0.005
2 PLACES	±0.13	±0.01
1 PLACE	±0.25	±0.02
0 PLACES	±----	±----
ANGULAR TOL ± 0.5 °		

DRAFT WHERE APPLICABLE MUST REMAIN WITHIN DIMENSIONS

CURRENT REV DESC: UPDATED MATERIALS, UPDATED AMPS, ADDED IEC VOLTAGE

EC NO: 660415
DRWN: ABENJAMINLW 2021/01/21
CHK'D: ALEON01 2021/04/13
APPR: BWOODMAN 2021/05/05

INITIAL REVISION:
DRWN: CAAVILES 2014/10/30
APPR: TWOLDEGE 2015/07/30

THIRD ANGLE PROJECTION | DRAWING: C-SIZE | SERIES: 130068

molex

BRAD POWER

QC 4 POLE TEE W/4 POLE MC DROP

PRODUCT CUSTOMER DRAWING

DOCUMENT NUMBER	DOC TYPE	DOC PART	REVISION
SD-130068-022	PSD	001	B

MATERIAL NUMBER	CUSTOMER	SHEET NUMBER
SEE CHART	GENERAL MARKET	1 OF 1

FORMAT: IN-ACAD-tb-prod-C
REVISION: B
DATE: 2020/01/14