THIS COPY IS PROVIDED ON A RESTRICTED BASIS AND IS NOT TO BE USED IN ANY WAY DETRIMENTAL TO THE INTERESTS OF PANDUIT CORP.

PANDUIT PART NO.	WEIGHT
TFC3	1.8 LB/100 PCS (822 g/100 PCS)

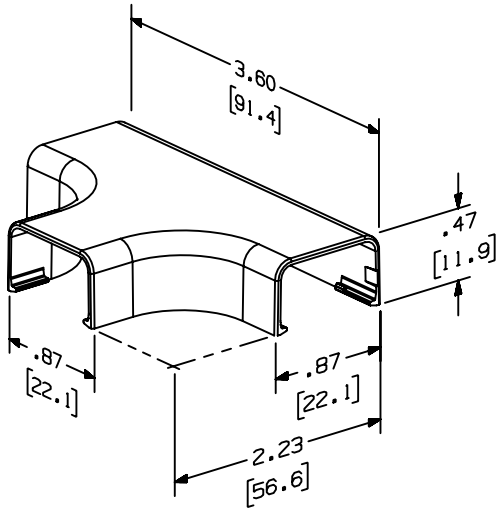

NOTES:
1. SEE CURRENT CATALOG FOR ADDITIONAL PART NUMBER SUFFIXES TO INDICATE COLOR AND OR PACKAGE QUANTITY.
2. THIS PRODUCT IS INTENDED TO BE USED WITH PANDUIT TYPE LD3 AND LDS3 RACEWAY. (B)
3. NOMINAL WALL THICKNESSES: .055(1.4).
4. THIS PRODUCT IS FEATURED WITH THE TIA/EIA COMPLIANT BEND RADIUS.
5. DIMENSIONS IN PARENTHESIS ARE IN METRIC.

REV	DATE	BY	CHK	DESCRIPTION	ECN	CHK	CUST	SUP
2	03-11-04	JHEP	RGRO	B. REMOVED CD3 FROM NOTE 2	35541-15	RGRO	RGRO	
1	07-02-02	JHNU	RMHI	A. REVISED MATERIAL IN DRAWING TITLE BLOCK	35541-15	RGRO	RGRO	
R	08-09-96	JBA	CEF	RELEASED TO PRODUCTION	35541-15	CEF	CEF	

CAD FILENAME/LAYERS: D35541BM_TFC3_C_02.PRT

PANDUIT CORP. TINLEY PARK, ILLINOIS

TEE FITTING COVER (TFC3)

CUSTOMER DRAWING

UNLESS OTHERWISE SPECIFIED, DIMENSIONAL TOLERANCES ARE:
(.X) ± (.XXX) ±.015 [.4]
(.XX) ±.03 [.8] ANGLES ±

UNLESS OTHERWISE SPECIFIED, ALL DIMENSIONS ARE GIVEN IN INCHES, THIRD ANGLE PROJECTION.

DRAWN BY: JBA
DATE: 08-09-96
CHECKED BY: CEF
MAT'L: ABS (A)
SCALE: NONE
DRAWING NO.: 35541-15
DWG SIZE: A