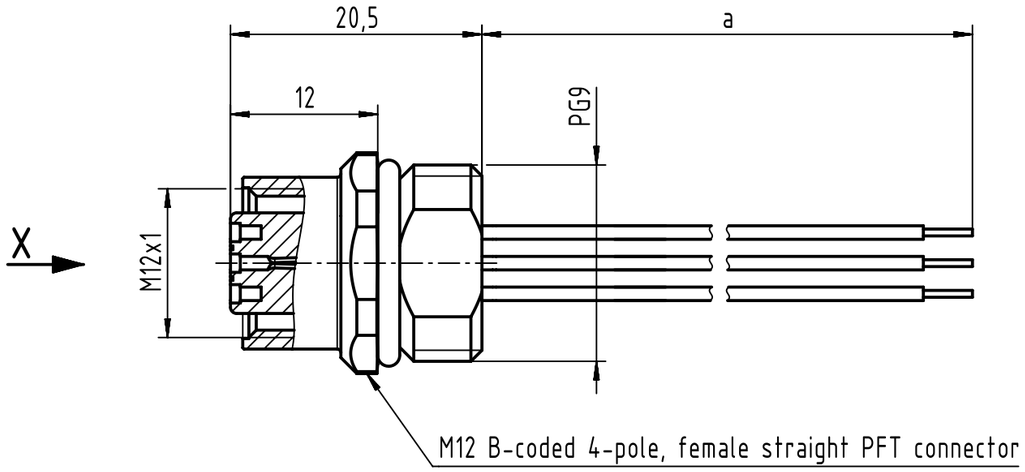

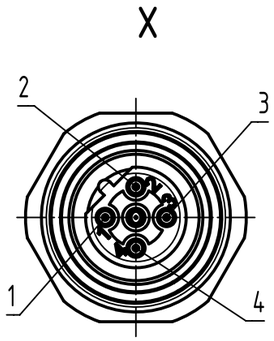

Loading-Plan:

1	brown
2	green
3	blue
4	red

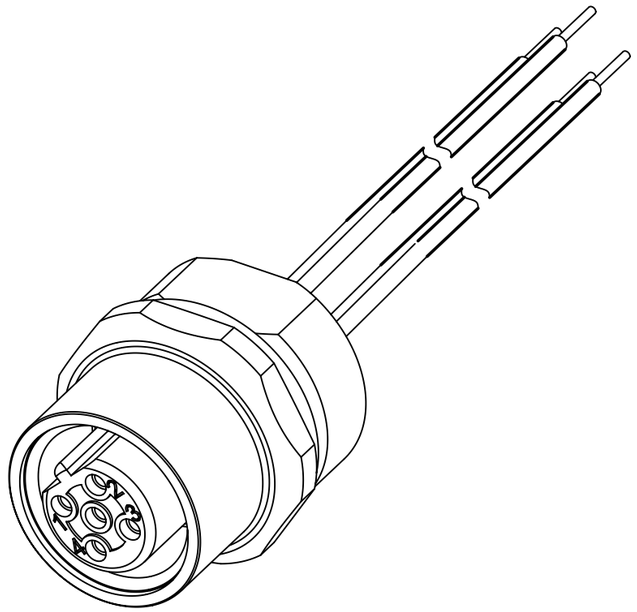

Recommended panel cut-out

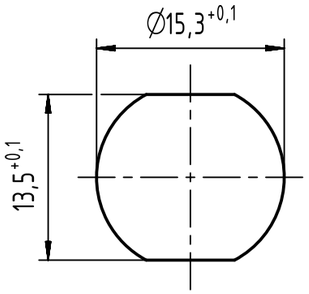

Minimum wall thickness 1.5mm

- Protection level: IP67
- Temperature range: -30°C ... +80°C
- Order lock nut separately

Cont. No.	Part - no.	Type of cable	Dim. a[m]
1	21033386405	AWG 24, PVC	0.5

All Dimensions in mm
Original Size DIN A3

Scale 2:1 | Free size tol. | Ref. | Sub.

All rights reserved

Department EC PD - RO

HARTING Electronics GmbH
D-32339 Espelkamp

Created by	Inspected by	Standardisation	Date	State
TAMAS	PRIESTER	HOFFMANN	2017-10-19	Final Release

Title: M12 B-coded Cable Assembly

Doc-Key / ECM-Nr.: 100581424/UGD/009/D 500000126780

Type: TB | Number: 210333864XX | Rev.: D | Page: 1/1

A3