DWG NO.	SH	REV
C-NLNAMB-C101	1	A

REVISIONS						
ZONE	REV.	ECN	DESCRIPTION	BY	DATE	APPROVED
ALL	A	MKHN-18121401	NEW RELEASE	HCL-PB	12/26/2018	M.HUSSAIN

TABLE 1

ITEM No.	DESCRIPTION
1	PLUG, QSFP-DD, REFERENCE "QSFP-DD MSA"
2	LABEL, PLUG - AHSP P/N, REV, DATE CODE, CoO, 0dB, 0W & SERIAL NUMBER
3	PULL TAB, BLUE 2718

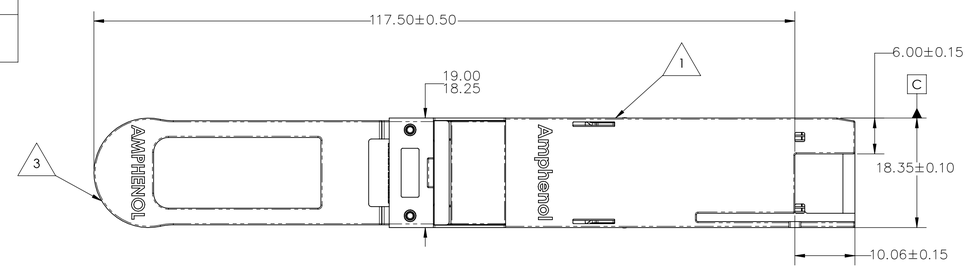

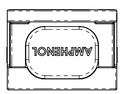

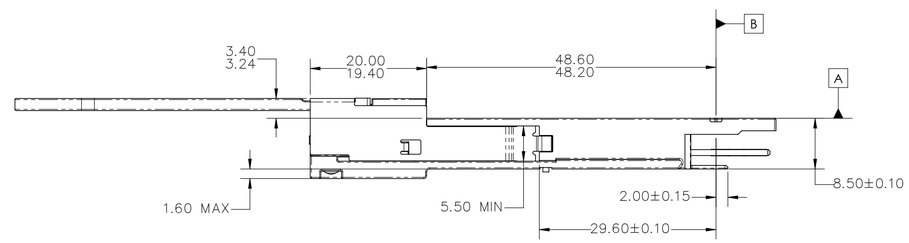

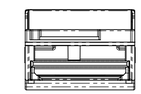

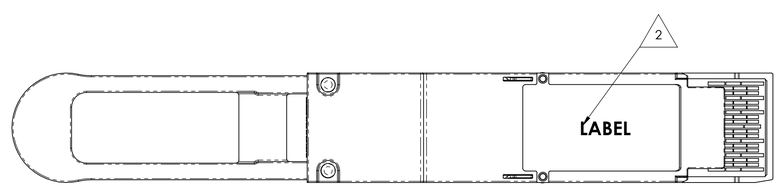

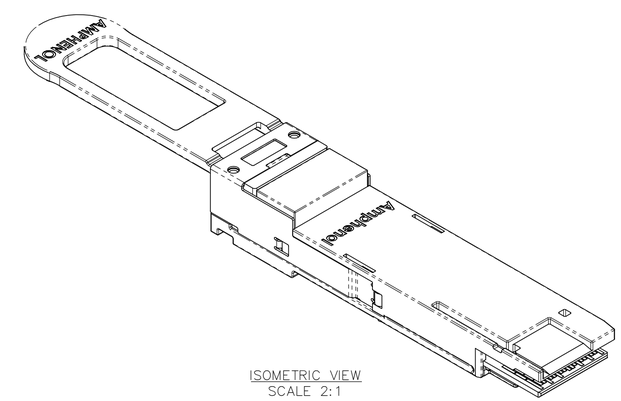

ISOMETRIC VIEW
SCALE 2:1

NOTES:

1. THIS DRAWING IS RESERVED FOR AMPHENOL CABLES ON DEMAND.
2. ASSEMBLIES SHALL BE COMPLIANT TO QSFP-DD MSA.
3. EPROM CONTENT SHALL BE COMPLIANT WITH QSFP-DD MSA SPECIFICATIONS FOR 400GB ASE-CR-4. EPROM REVISION IS EQUAL TO CUSTOMER PART NUMBER REVISION UNLESS OTHERWISE NOTED.

Amphenol RoHS 2011/65/EU

TOLERANCES	
0.0	± 0.1
0.00	± 0.08
0.000	± –
ANGLES	± 1.0°

UNLESS OTHERWISE SPECIFIED DIMENSIONS ARE IN MM

DWN	12/14/2018	M.HUSSAIN
CHK	12/14/2018	M.HUSSAIN
APVD	12/14/2018	M.HUSSAIN

Amphenol AHSP

A Division of Amphenol Corporation
200 Innovative Way, Suite 201, Nashua, N.H. 03062 (603) 879-3000

TITLE: ELECTRICAL LOOPBACK PASSIVE, QSFP-DD

INTERPRET PER ASME Y14.5

CODE IDENT 31413

CUSTOMER USE DRAWING

PART NO.	REV
NLNAMB-C101	N/A

DRAWING NO.	REV
C-NLNAMB-C101	A

SIZE D | SCALE 2:1 | SHEET 1 OF 1

DWG NO. C-NLNAMB-C101 SH 1 REV A