Rev	AWO #	Description	Date	Appr
-		RELEASED	11/24/14	

APPROVED: _____

DATE: _____ TITLE: _____

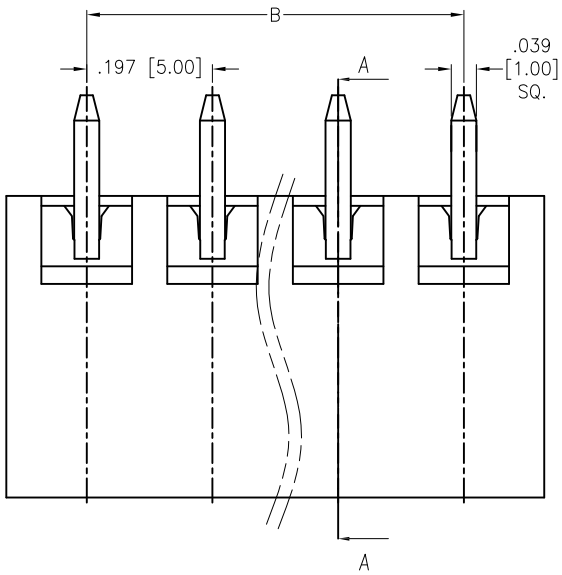

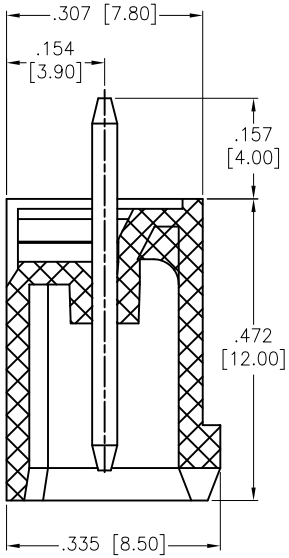

SECTION A–A

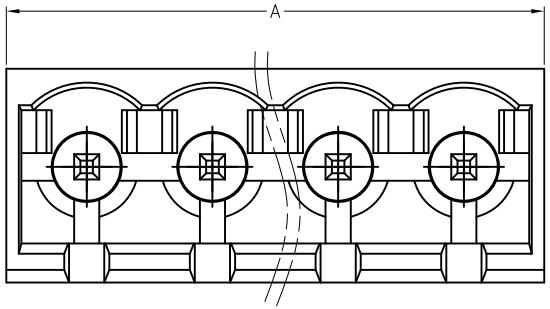

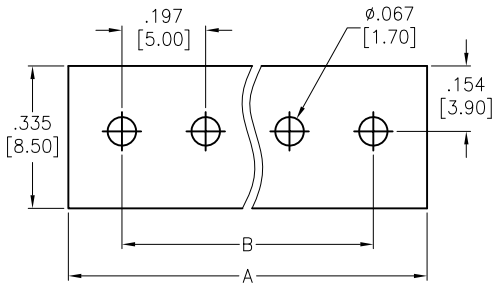

RECOMMENDED PCB LAYOUT

SPECIFICATIONS:
Material:
Insulator: PA66, rated UL 94V–0
Insulator color: Green
Contact: Brass, Tin plated.
Electrical:
Operation voltage: 300 VAC max
Current rating: 15 Amps
Contact resistance: 20 mohms max
Insulation resistance: 500 Mohms min @ 500 VDC
Dielectric withstanding voltage: 2,000 VAC for 1 minute
Temperature Rating:
Operating temperature: –40°C to +105°C
Environmental:
Lead free, RoHS compliant.

RoHS COMPLIANT

Positions: 02 thru 24
A = .197 [5.00] x No. of Positions + .055 [1.40]
B = .197 [5.00] x No. of Spaces

UNLESS OTHERWISE SPECIFIED
ALL DIMENSIONS ARE MM [INCHES]
TOLERANCES: EXCEPT AS NOTED

INCHES		HOLES	
.X	± .10	Ø.X	±.10
.XX	± .020	Ø.XX	±.015
.XXX	± .015	Ø.XXX	±.010

APPROVALS		DATE
DRAWN	HR	11/24/14
CHECKED	NP	11/24/14
APPROVED		

ADAM TECH
909 Rahway Avenue, Union, NJ 07083
Phone: 908-687-5000 Fax: 908-687-5710

TITLE
TERMINAL BLOCK, SOCKETS .197 [5.00] PITCH
VERTICAL, CLOSE TYPE

SIZE	PART NO.	REV.
X	EBPA-XX-C-C	-

REF: S00067C | SCALE: NTS | SHEET 1 OF 1