ASSEMBLY ITEM NUMBER	PART CHARACTERISTICS	
	NUMBER OF POSITION	PANEL MOUNT OPTION
43020-0210	02	YES
43020-0211	02	NO
43020-0410	04	YES
43020-0411	04	NO
43020-0610	06	YES
43020-0611	06	NO
43020-0810	08	YES
43020-0811	08	NO
43020-1010	10	YES
43020-1011	10	NO
43020-1210	12	YES
43020-1211	12	NO
43020-1410	14	YES
43020-1411	14	NO
43020-1610	16	YES
43020-1611	16	NO
43020-1810	18	YES
43020-1811	18	NO
43020-2010	20	YES
43020-2011	20	NO
43020-2210	22	YES
43020-2211	22	NO
43020-2410	24	YES
43020-2411	24	NO

CKT. NO.	DIM. "A"	DIM. "B"	DIM. "C"	DIM. "D"
2	.152/(3.86)	N/A	.166/(4.21)	.311/(7.90)
4	.270/(6.85)	.118/(3.00)	.284/(7.21)	.429/(10.90)
6	.388/(9.85)	.236/(6.00)	.402/(10.21)	.547/(13.89)
8	.506/(12.85)	.354/(9.00)	.520/(13.21)	.665/(16.89)
10	.624/(15.85)	.472/(12.00)	.638/(16.21)	.783/(19.89)
12	.742/(18.85)	.591/(15.00)	.756/(19.21)	.901/(22.89)
14	.860/(21.85)	.709/(18.00)	.874/(22.20)	1.019/(25.88)
16	.978/(24.85)	.827/(21.00)	.992/(25.20)	1.137/(28.88)
18	1.096/(27.85)	.945/(24.00)	1.110/(28.20)	1.255/(31.88)
20	1.215/(30.85)	1.063/(27.00)	1.229/(31.22)	1.373/(34.87)
22	1.333/(33.85)	1.181/(30.00)	1.347/(34.22)	1.491/(37.87)
24	1.451/(36.85)	1.299/(33.00)	1.465/(37.22)	1.609/(40.87)

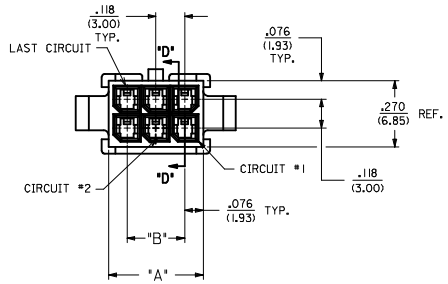

NOTES:
1) HOUSING MATERIAL: UNFILLED NYLON, UL 94V-2, IEC 60335-1, 4TH EDITION GLOW WIRE CAPABLE, COLOR - BLACK
*MATERIAL NUMBERS ON THIS DRAWING ARE GLOW WIRE CAPABLE SINCE INCEPTION
2) FINISH: N/A
3) PRODUCT SPECIFICATION: PS-43045
4) PACKAGING SPECIFICATION: PK-43020-001
5) THIS HOUSING MATES WITH MICRO-FIT RECEPTACLE #43025-****
6) THIS HOUSING TO BE USED WITH MOLEX MALE TERMINAL #43031-****
7) DESIGNED FOR .055/(1.4) MINIMUM TO A .100/(2.54) MAXIMUM THICK PANEL OR PRINTED CIRCUIT BOARD.
8) SEE SECTION "D"-"D" FOR TERMINAL ORIENTATION IN HOUSING.
9) PANEL MOUNT FEATURES MUST LOCK ON SIDE OPPOSITE PUNCH SIDE FOR OPTIMUM RETENTION.
10) THIS PART CONFORMS TO CLASS 'B' REQUIREMENTS OF COSMETIC SPECIFICATION PS-45499-002, WITH THE EXCEPTION THAT FLASH, DISCOLORATION, AND SINK MEET CLASS "C" REQUIREMENTS.'
11) HOUSINGS MAY HAVE DISCOLORATION AREAS THAT DO NOT AFFECT FUNCTIONALITY. DISCOLORATION AREAS MAY EXTEND ACROSS THE ENTIRE LENGTH OF THE FACES OF THE PART.

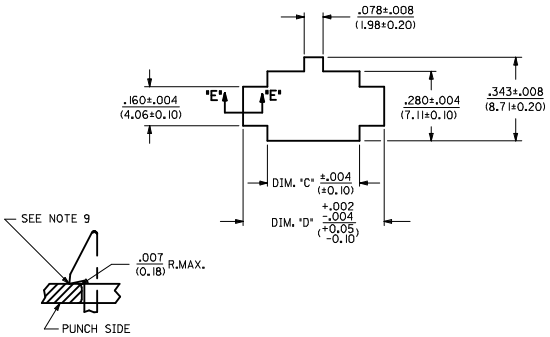

SECTION "E"-"E"
(NO SCALE)

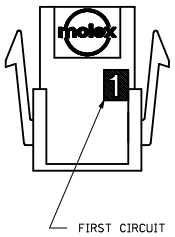

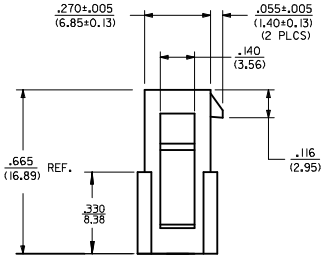

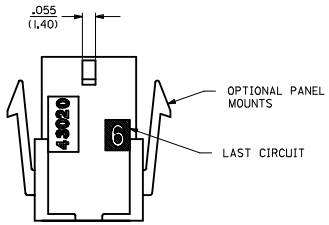

RECOMMENDED PANEL CUT-OUT
(SEE NOTES 7 & 9)

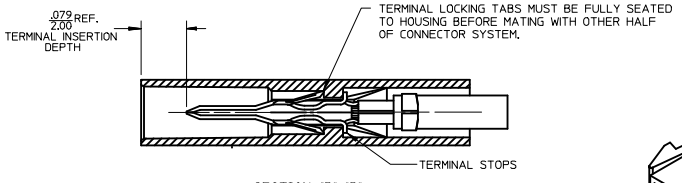

SECTION "B"-"B"

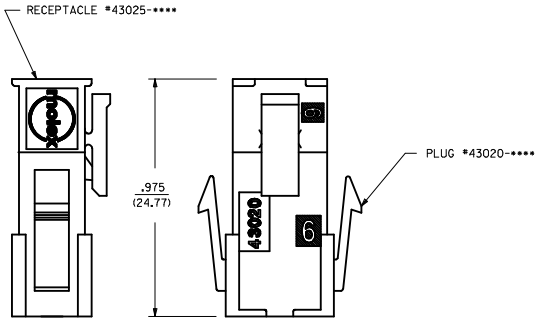

MATED MICRO-FIT CONNECTOR

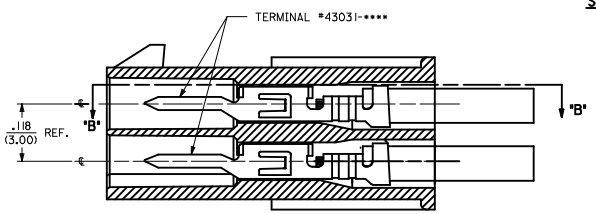

SECTION "D"-"D"
WITH TERMINAL
(SCALE: 8X)

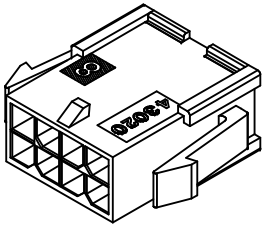

PLUG WITH OPTIONAL PANEL MOUNTS
ISO VIEW
(8 CIRCUIT SHOWN)

UPDATE PUNCHED HOLE			
EC NO: UCP2017-0525			
DRWN: JQUILES	2016/09/01		
CHKD: SSOUSEK	2016/09/01		
APPR: FSMITH	2016/10/07		
A1	REV	DESCRIPTION	

QUALITY SYMBOLS: E_A =0, E_C =0, E_P =0

GENERAL TOLERANCES (UNLESS SPECIFIED)	mm	INCH
4 PLACES	± ---	± ---
3 PLACES	± ---	± .010
2 PLACES	± 0.25	± .014
1 PLACE	± 0.35	± ---
0 PLACE	± ---	± ---
ANGULAR ±1/2°		

DRAFT WHERE APPLICABLE MUST REMAIN WITHIN DIMENSIONS

DIMENSION STYLE: IN/MM	SCALE	DESIGN UNITS: METRIC	THIRD ANGLE PROJECTION
DRAWN BY: JMONTI	DATE: 2015/06/16	TITLE: MICRO-FIT(3.0) PLUG WITH OPTIONAL PANEL MOUNTS GLOW WIRE	
CHECKED BY: BANDERSON	DATE: 2015/06		
APPROVED BY: FSMITH	DATE: 2016/10/07	molex	
MATERIAL NO.: SEE CHART		DOCUMENT NO.: SD-43020-002	SHEET NO.: 1 OF 1
SIZE: C	THIS DRAWING CONTAINS INFORMATION THAT IS PROPRIETARY TO MOLEX INCORPORATED AND SHOULD NOT BE USED WITHOUT WRITTEN PERMISSION		