THIS COPY IS PROVIDED ON A RESTRICTED BASIS AND IS NOT TO BE USED IN ANY WAY DETRIMENTAL TO THE INTERESTS OF PANDUIT CORP.

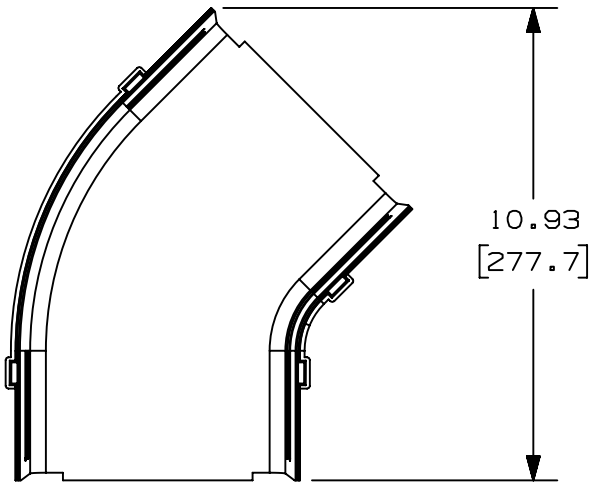

NOTES:

1. SEE CURRENT CATALOG FOR ADDITIONAL PART SUFFIXES TO INDICATE COLOR AND/OR PACKAGE QUANTITY.
2. THE FIBERRUNNER 6x4 HORIZONTAL 45° ANGLE FITTING IS DESIGNED WITH A MINIMUM 2" (50.8) BEND RADIUS TO PROTECT FIBER OPTIC CABLES.
3. DIMENSIONS IN PARENTHESES ARE IN METRIC.
4. PARTS SUPPLIED:
   (1)- 45° HORIZONTAL ANGLE

PANDUIT PART NUMBER	WEIGHT	MATERIAL
FRH456X4**	0.69 LB/EACH (314g/EACH)	ABS
FRH456X4L**	0.69 LB/EACH (314g/EACH)	PC/ABS

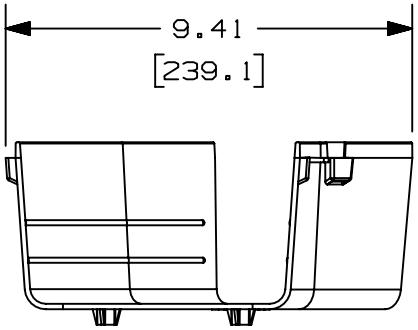

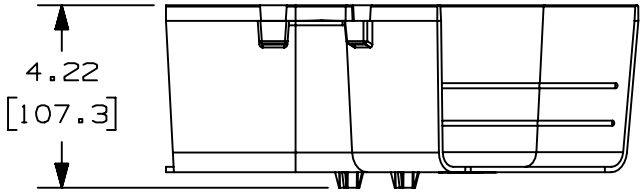

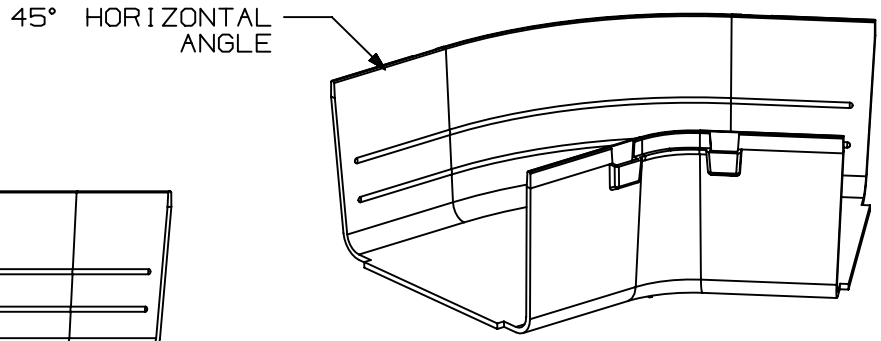

REV	DATE	BY	CHK	APR	DESCRIPTION	ECN
03B	8/21/20	MEX-JAGC	DWR	DWR	ADDED PART NUMBER	V09002DZ/11

TITLE

FIBERRUNNER 6x4 HORIZONTAL 45° ANGLE FITTING (FRH456X4**, FRH456X4L**)

CUSTOMER DRAWING

ITEM REVISION NAME: D37686BF/03

DATASET FILE NAME: D37686BF_DC/03B

PANDUIT

MATERIAL: SEE PART NUMBER TABLE ABOVE

THIRD ANGLE PROJECTION

DRAWING NUMBER: 37686-05

DRAWN BY	DATE	CHK	SCALE	SIZE
JHNU	8-18-00	HIW	NONE	A

SHT 1 OF 1

D10100DA/20