MICRO SWITCH
FREEPORT ILLINOIS, U.S.A
A DIVISION OF HONEYWELL INC.
FED. MFG. CODE 91929

SWITCH - BASIC

CATALOG LISTING
V3-3059
CK-X3565

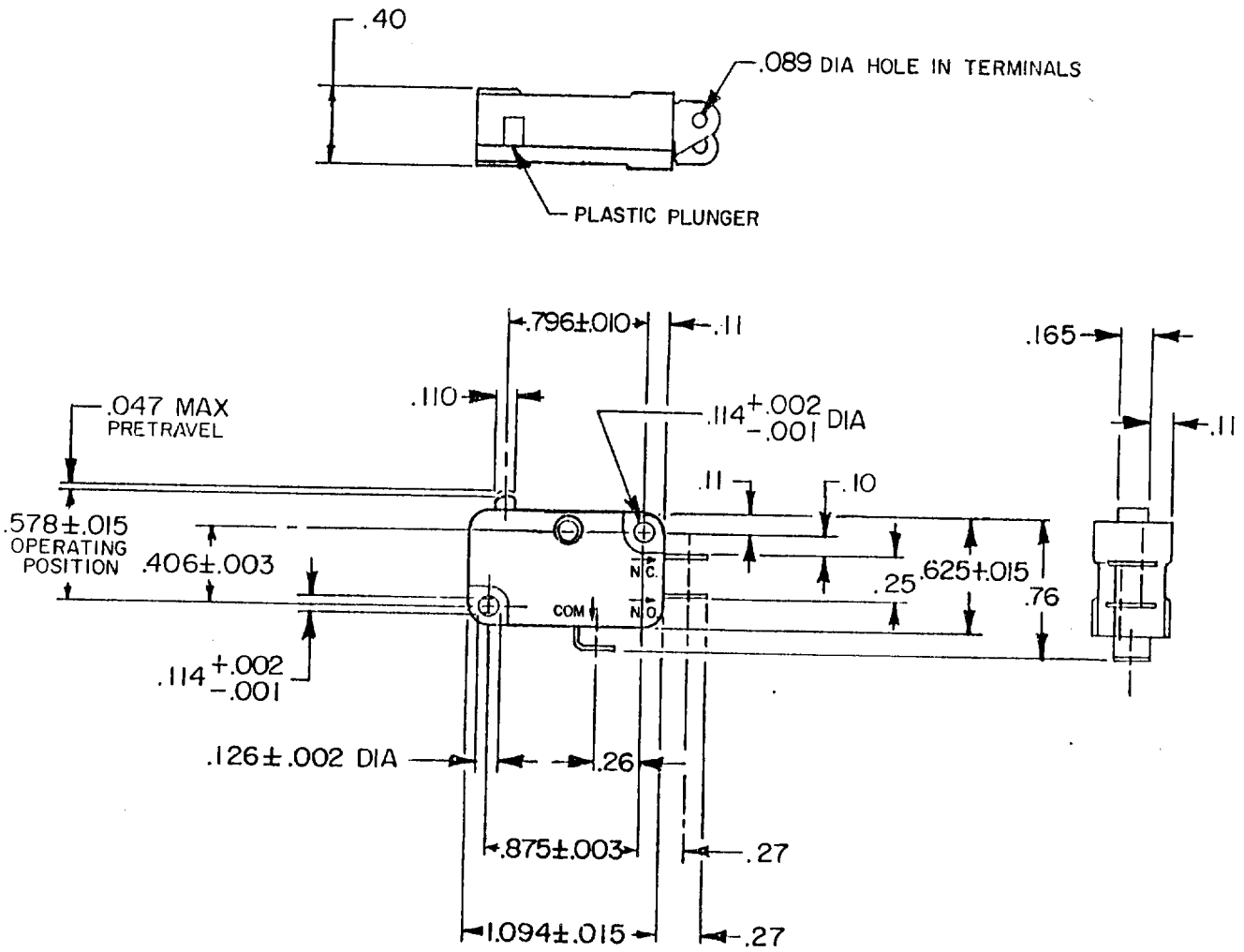

NOTE
1 TERMINALS ARE PLATED FOR SOLDERING

THIS DRAWING COVERS A PROPRIETARY ITEM AND IS THE PROPERTY OF MICRO SWITCH, A DIVISION OF HONEYWELL. THIS DRAWING IS NOT TO BE COPIED OR USED WITHOUT THE APPROVAL OF MICRO SWITCH.

THIRD ANGLE PROJECTION

CHARACTERISTICS

OPERATING FORCE — — — 150 GRAM MAX

RELEASE FORCE — — — — 15 GRAM MIN

DIFFERENTIAL TRAVEL — — — — .002-.010

OVERTRAVEL — — — — — — — — .050 MIN

FREE POSITION — — — — — — — — .625 MAX

RELEASE TRAVEL — — — — — — — — .010 MIN

ELECTRICAL DATA

CONTACT ARRANGEMENT
S P D T

L83
15.1A 1/2HP 125 OR 250 VAC
1/2A 125 VDC, 1/4A 250 VDC
5A 125 VAC "L"

SCALE FULL — DO NOT SCALE PRINT

UNLESS OTHERWISE SPECIFIED TOLERANCES ARE

ONE PLACE	(.0)	± .030
TWO PLACE	(.00)	± .015
THREE PLACE	(.000)	± .005
ANGLES		±

RAW MATERIAL — COMMERCIAL STANDARD

DIMENSIONS ARE IN INCHES AND ARE TO BE MET BEFORE PROTECTIVE COATINGS ARE APPLIED

MICRO SWITCH STANDARDS APPLY

WEIGHT .016 LB

V3-3059
RELEASE NO. PR-15040 REPLACES
DRAWING NUMBER
ISSUE X2
CHECK

REVISIONS
A CO74212 D H D 20 JAN 93

DRAWN T A D 18 SEP 86 CHECK

FO-5284R-B