MATERIAL NO.	ENGINEERING NO.	FINISHED LENGTH
1300640447	CC3030K19M010E	1M (3 FT 3.37 IN)
1300642064	CC3030K19M900G	90M (295 FT 3.31 IN)
1300642110	CC3030K19T200E	200M (656 FT 2.02 IN)

C

CABLE LENGTH TOLERANCES
<.3M [1FT]: +19mm-0 [+.75in-0]
.3 - .9M [1 - 3FT]: +44.5mm-0 [+1.75in-0]
.9 - 1.8M [3 - 6FT]: +55.6mm-0 [+2.19in-0]
1.8 - 3.7M [6 - 12FT: +88.9mm-0 [+3.50in-0]
3.7 - 7.3M [12 - 24FT]: +165.1mm-0 [+6.50in-0]
7.3-14.6M [24 - 48FT]: +317.5mm-0 [+12.50in-0]
14.6 - 30.5M [48-100FT]: +622.3mm-0 [+24.50in-0]
OVER 30M [100FT] +2% OF FINISHED LENGTH

C

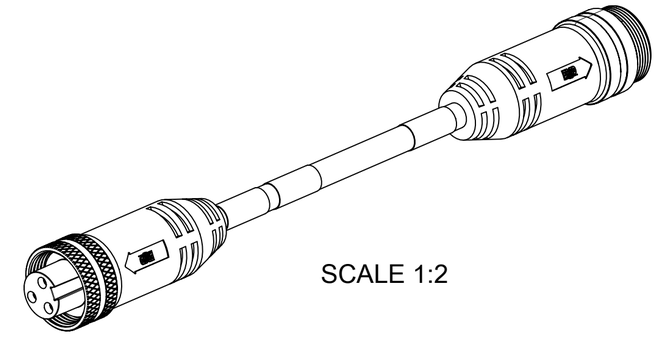

SCALE 1:2

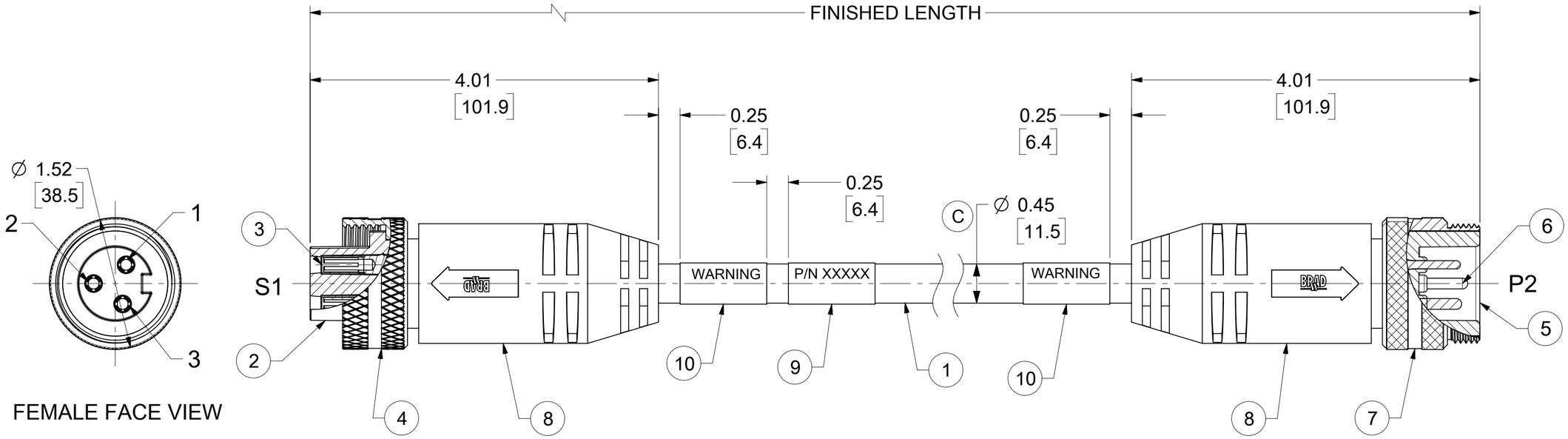

FEMALE FACE VIEW

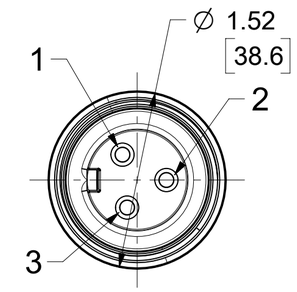

MALE FACE VIEW

NOTES:
1. MATERIAL: AS NOTED
2. FINISH: AS NOTED
3. ELECTRICAL:
   VOLTAGE: 630V PER IEC60664
   600V PER UL2237
   CURRENT: 32A
4. TEMP RATING: -20°C TO +90°C
5. PROTECTION: IP67 (WHEN MATED)
6. UL LISTED FILE: 258922
7. COUPLING THREAD: 1 3/8"-16 UN
8. ALL DIMS ARE FOR REFERENCE UNLESS TOLERANCED OR NOTED OTHERWISE

WIRING DIAGRAM

S1		P2
1	BLACK	1
2	GREEN/YELLOW	2
3	WHITE	3

PART NUMBER LEGEND C

CC3030K19M010E

OVERMOLD OPTION
E=RED
G=BLACK

FINISHED LENGTH
M001 = 0.1 METER
M010 = 1.0 METER
M100 = 10.0 METER
T100 = 100 METER

ITEM	DESCRIPTION	MATERIAL	FINISH	
10	WARNING LABEL	VINYL	ORANGE/BLACK	
9	WRAP LABEL	VINYL	BLACK/YELLOW	
8	OVERMOLDS	TPE	SEE LEGEND	C
7	MALE COUPLING NUT	ALUMINIUM	CLEAR ANODIZE	
6	CONTACT PIN	Cu ALLOY	GOLD OVER NICKEL	
5	MALE INSERT	TPE	BLACK	C
4	FEMALE COUPLING NUT	ALUMINIUM	CLEAR ANODIZE	
3	SOCKET CONTACT	Cu ALLOY	GOLD OVER NICKEL	
2	FEMALE INSERT	TPE	BLACK	C
1	#10-3, CABLE, TC-ER	TPE	BLACK	

DOCUMENT STATUS | P1 | RELEASE DATE | 2022/06/14 13:48:42

FUNCTIONAL SYMBOLS
FA = 0
FC = 0
FP = 0
DIVISIONAL SYMBOLS

THIS DRAWING CONTAINS INFORMATION THAT IS PROPRIETARY TO MOLEX ELECTRONIC TECHNOLOGIES, LLC AND SHOULD NOT BE USED WITHOUT WRITTEN PERMISSION

DIMENSION UNITS: INCH/MM
SCALE: 1:1
GENERAL TOLERANCES (UNLESS SPECIFIED)

	MM	INCH
4 PLACES	±	±
3 PLACES	±	±
2 PLACES	±	±
1 PLACE	±	±
0 PLACES	±	±
ANGULAR TOL	± °	

DRAFT WHERE APPLICABLE MUST REMAIN WITHIN DIMENSIONS

CURRENT REV DESC: UPDATED ITEM #2, 5 & 8 WERE PVC, MATERIAL TABLE, TOL. TABLE & PART NO. LEGEND. ADDED CABLE DIA.

EC NO: 709714
DRWN: VHANDI 2020/05/29
CHK'D: RSTONE 2022/06/08
APPR: BWOODMAN 2022/06/14

INITIAL REVISION:
DRWN: B.RUPERT 2001/12/10
APPR: BWOODMAN 2014/09/04

THIRD ANGLE PROJECTION | DRAWING: C-SIZE | SERIES: 130064

molex

BRAD POWER, M35
3 POLE, FEMALE/MALE, STRAIGHT, SINGLE KEY, 10AWG

PRODUCT CUSTOMER DRAWING

DOCUMENT NUMBER	DOC TYPE	DOC PART	REVISION
SD-130064-005	PSD	001	C

MATERIAL NUMBER	CUSTOMER	SHEET NUMBER
SEE TABLE	GENERAL MARKET	1 OF 1

FORMAT: Eng-lega-master-tb-prod-C
REVISION: E
DATE: 2020/01/14