MATERIAL NO.	ENGINEERING NO.	FINISHED LENGTH
1300640453	CC4030K17M010G	1M (3 FT 3.37 IN)
1300640515	CC4030K17M650G	65M (213 FT 3.06 IN)
1300642118	CC4030K17T130G	130M (426 FT 6.11 IN)

(C)

(C) CABLE LENGTH TOLERANCES
<.3M [1FT]: +19mm-0 [+.75in-0]
.3 - .9M [1 - 3FT]: +44.5mm-0 [+1.75in-0]
.9 - 1.8M [3 - 6FT]: +55.6mm-0 [+2.19in-0]
1.8 - 3.7M [6 - 12FT: +88.9mm-0 [+3.50in-0]
3.7 - 7.3M [12 - 24FT]: +165.1mm-0 [+6.50in-0]
7.3-14.6M [24 - 48FT]: +317.5mm-0 [+12.50in-0]
14.6 - 30.5M [48-100FT]: +622.3mm-0 [+24.50in-0]
OVER 30M [100FT] +2% OF FINISHED LENGTH

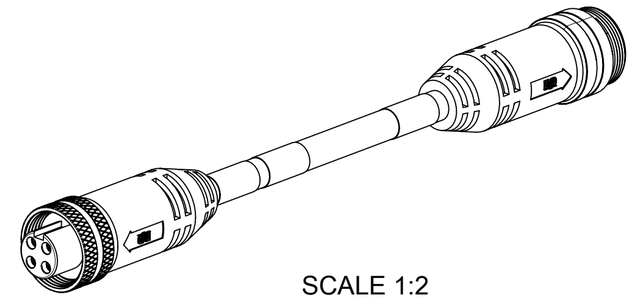

SCALE 1:2

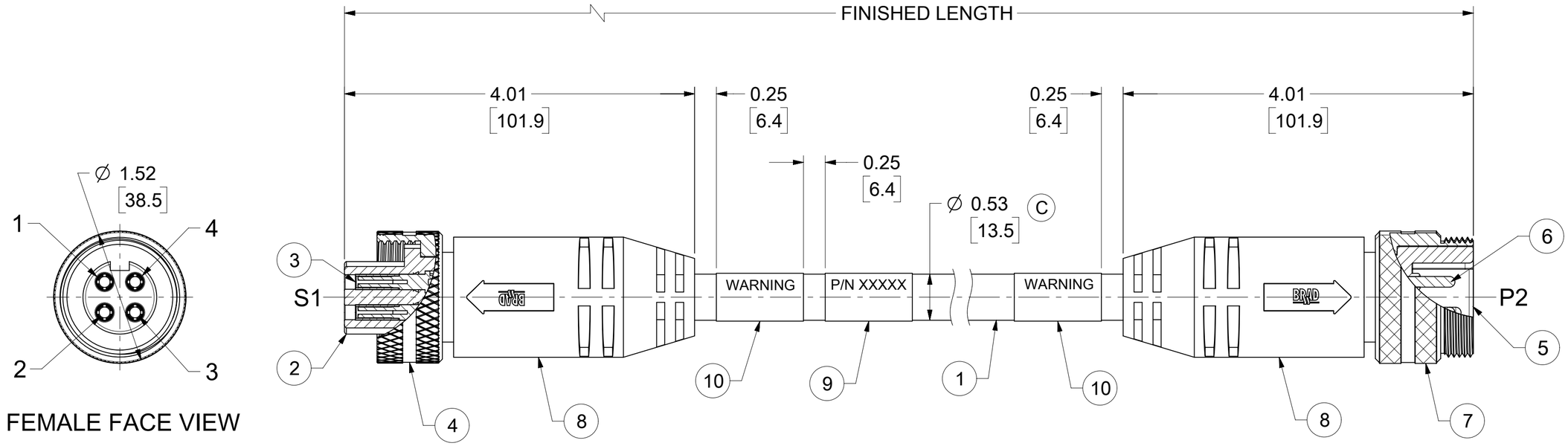

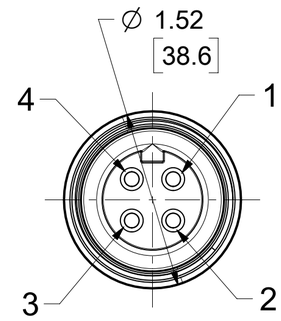

NOTES:
1. MATERIAL: AS NOTED
2. FINISH: AS NOTED
3. ELECTRICAL:
   VOLTAGE: 500V PER IEC60664 (C)
   600V PER UL2237
   CURRENT: 32A
4. TEMP RATING: -20°C TO +90°C
5. PROTECTION: IP67 (WHEN MATED)
6. UL LISTED FILE: 258922
7. COUPLING THREAD: 1 3/8"-16 UN
8. ALL DIMS ARE FOR REFERENCE UNLESS TOLERANCED OR NOTED OTHERWISE

WIRING DIAGRAM

S1		P2
1	BLACK #1	1
2	GREEN/YELLOW	2
3	BLACK #3	3
4	BLACK #2	4

PART NUMBER LEGEND (C)

CC4030K17M010G

FINISHED LENGTH
M001 = 0.1 METER
M010 = 1.0 METER
M100 = 10.0 METER
T100 = 100 METER

ITEM	DESCRIPTION	MATERIAL	FINISH	
10	WARNING LABEL	VINYL	ORANGE/BLACK	(C)
9	WRAP LABEL	VINYL	BLACK/YELLOW	(C)
8	OVERMOLD	TPE	BLACK	(C)
7	MALE COUPLING NUT	ALUMINIUM	CLEAR ANODIZE	
6	PIN CONTACT	Cu ALLOY	GOLD OVER NICKEL	
5	MALE INSERT	TPE	BLACK	(C)
4	FEMALE COUPLING NUT	ALUMINIUM	CLEAR ANODIZE	
3	SOCKET CONTACT	Cu ALLOY	GOLD OVER NICKEL	
2	FEMALE INSERT	TPE	BLACK	(C)
1	CABLE, #10-4, TC-ER	TPE	BLACK	

DOCUMENT STATUS	P1	RELEASE DATE	2022/06/14 13:48:43

THIS DRAWING CONTAINS INFORMATION THAT IS PROPRIETARY TO MOLEX ELECTRONIC TECHNOLOGIES, LLC AND SHOULD NOT BE USED WITHOUT WRITTEN PERMISSION

FUNCTIONAL SYMBOLS
FA = 0
FC = 0
FP = 0
DIVISIONAL SYMBOLS

DIMENSION UNITS: INCH/MM
SCALE: 1:1

GENERAL TOLERANCES (UNLESS SPECIFIED)

	MM	INCH
4 PLACES	±	±
3 PLACES	±	±
2 PLACES	±	±
1 PLACE	±	±
0 PLACES	±	±
ANGULAR TOL	± °	

DRAFT WHERE APPLICABLE MUST REMAIN WITHIN DIMENSIONS

CURRENT REV DESC: UPDATED ITEM #2,5,8 WERE PVC, 9&10, WERE PLASTIC FILM, PART NO. LEGEND ADDED MATERIAL TABLE,TOL. TABLE, IEC VOLT & CABLE DIA.

EC NO: 709714
DRWN: VHANDI 2020/05/29
CHK'D: RSTONE 2022/06/08
APPR: BWOODMAN 2022/06/14

INITIAL REVISION:
DRWN: BRUPERT 2011/11/09
APPR: BWOODMAN 2014/09/04

molex

BRAD POWER, M35
4 POLE, FEMALE-MALE, STRAIGHT, SINGLE KEY
10 AWG

PRODUCT CUSTOMER DRAWING

THIRD ANGLE PROJECTION	DRAWING	SERIES	MATERIAL NUMBER	CUSTOMER	SHEET NUMBER
	C-SIZE	130064	SEE TABLE	GENERAL MARKET	1 OF 1

DOCUMENT NUMBER	DOC TYPE	DOC PART	REVISION
SD-130064-006	PSD	001	C

FORMAT: Eng-tega-master-tb-prod-C
REVISION: E
DATE: 2020/01/14