ORDER NO.	WOODHEAD NO.	COLOR
130144-0019	25T04	BLACK

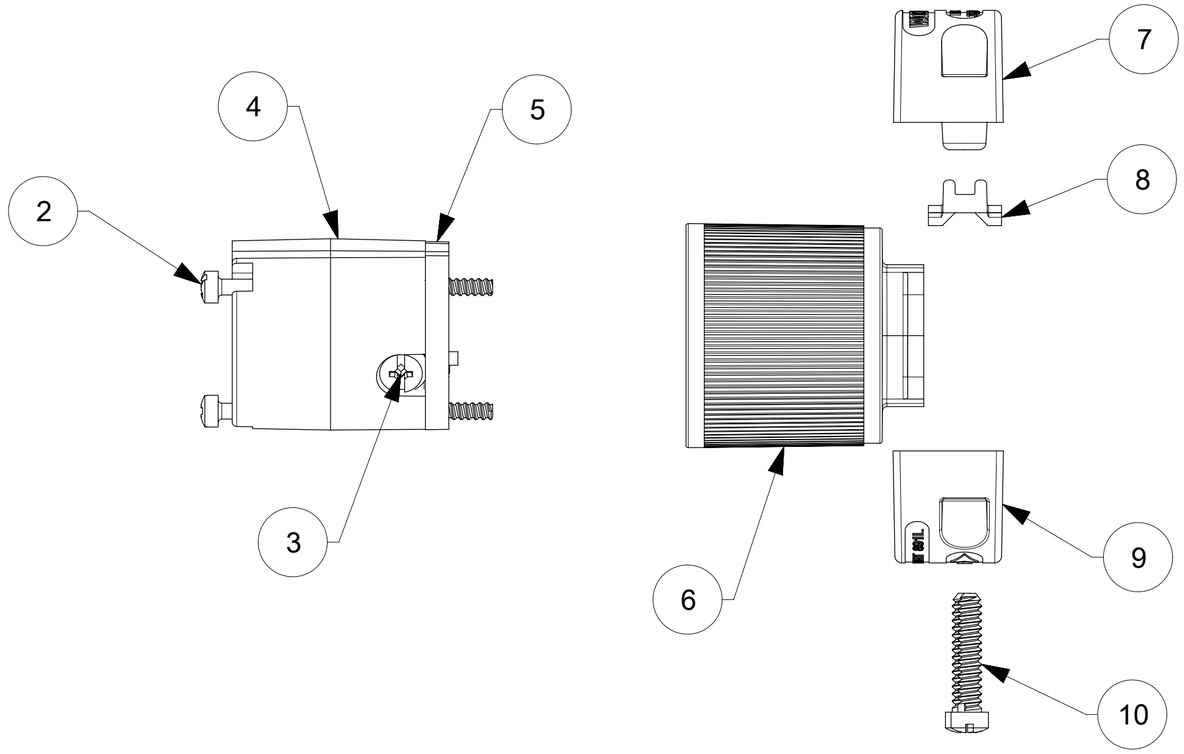

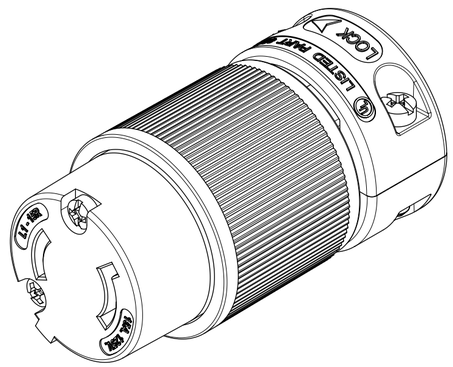

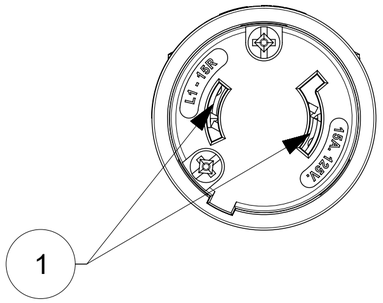

FACE VIEW

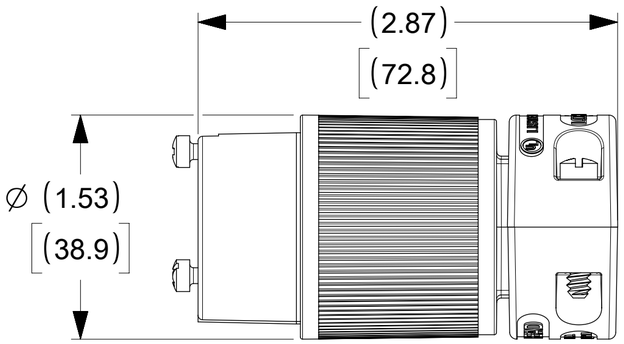

WIRING TERMINATION

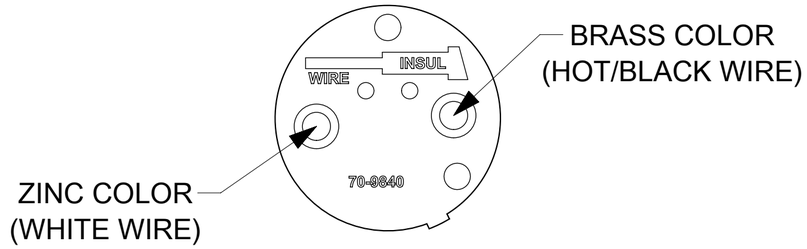

ITEM NO.	DESCRIPTIONS	MATERIAL	QTY.
1	BLADES	BRASS	2
2	RETAINING SCREWS	STAINLESS STEEL	2
3	TERMINAL SCREWS/CLAMP ASSEMBLY	BRASS, ZINC PLATED	2
4	INSERT	NYLON	1
5	TERMINAL COVER	POLYCARBONATE	1
6	HOUSING 20A	NYLON	1
7	CLAMP CORD MALE 20A	NYLON	1
8	CLAMP CORD 20A INSERT	NYLON	1
9	CLAMP CORD FEMALE 20A	NYLON	1
10	RETAINING SCREWS	STEEL, ZINC PLATED	2

DOCUMENT STATUS	P1	RELEASE DATE	2020/01/13 22:31:14

SYMBOLS: F/A = 0; F/C = 0; F/D = 0; S = 0; ▼ = 0; C = 0; ☒ = 0; ■ = 0; G = 0

THIS DRAWING CONTAINS INFORMATION THAT IS PROPRIETARY TO MOLEX ELECTRONIC TECHNOLOGIES, LLC AND SHOULD NOT BE USED WITHOUT WRITTEN PERMISSION

DIMENSION UNITS: INCH[MM] | SCALE: NTS

GENERAL TOLERANCES (UNLESS SPECIFIED)

	MM	INCH
4 PLACES	±	±
3 PLACES	±	±
2 PLACES	±	±
1 PLACE	±	±
0 PLACES	±	±
ANGULAR TOL	± °	

DRAFT WHERE APPLICABLE MUST REMAIN WITHIN DIMENSIONS

CURRENT REV DESC: NEW RELEASE

EC NO: 621489
DRWN: VBASUTHKARP 2019/02/28
CHK'D: DNGUYEN62 2019/12/02
APPR: HKNEELAND 2020/01/13

INITIAL REVISION:
DRWN: VBASUTHKARP 2019/02/28
APPR: HKNEELAND 2020/01/13

THIRD ANGLE PROJECTION | DRAWING: C-SIZE | SERIES: 130144

molex

SAFEWAY CONNECTOR TURNEX 2P2W L1-15

PRODUCT CUSTOMER DRAWING

DOCUMENT NUMBER	DOC TYPE	DOC PART	REVISION
1301440019	PSD	000	A

MATERIAL NUMBER	CUSTOMER	SHEET NUMBER
SEE TABLE	GENERAL MARKET	1 OF 1

FORMAT: Eng-tega-master-tb-prod-C
REVISION: D
DATE: 2018/01/18