ORDER NO.	WOODHEAD NO.	COLOR
130147-0090	29W08MB	YELLOW

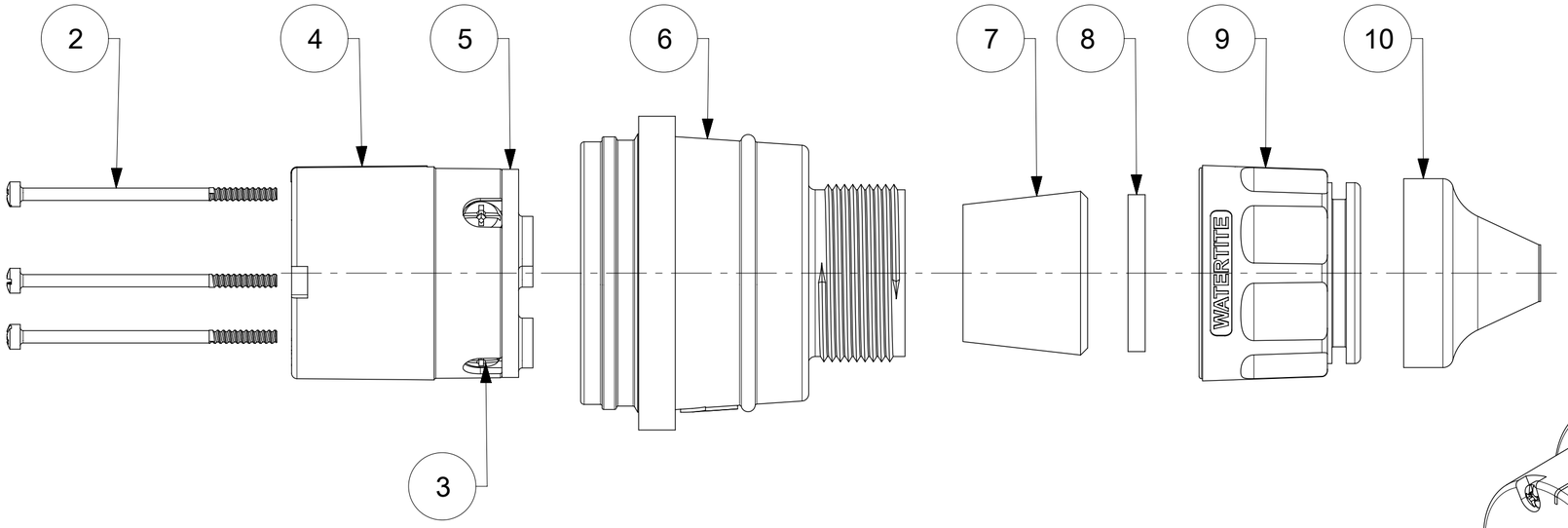

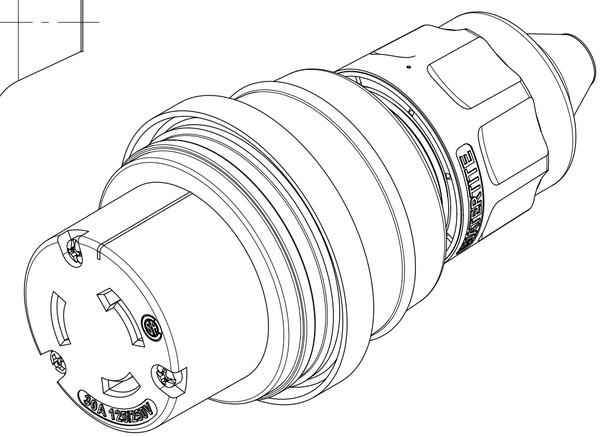

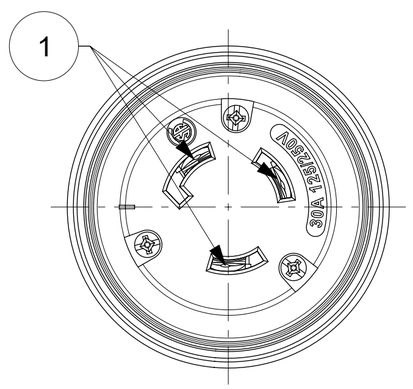

FACE VIEW

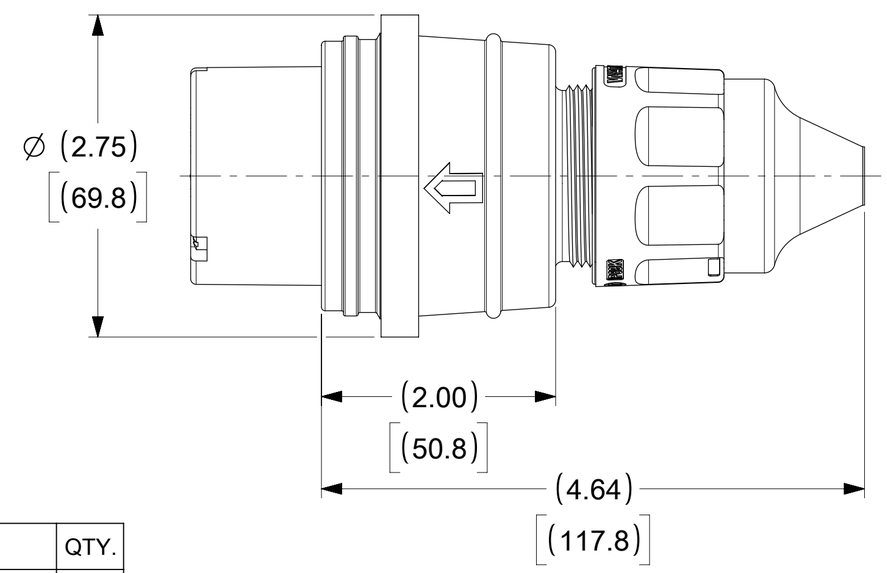

ITEM NO.	DESCRIPTIONS	MATERIAL	QTY.
1	BLADE	BRASS, NICKEL PLATED	3
2	RETAINING SCREWS	STAINLESS STEEL	3
3	CLAMP AND TERMINAL SCREW ASSY	BRASS, ZINC PLATED	3
4	INSERT	NYLON	1
5	TERMINAL COVER	POLYCARBONATE	1
6	HOUSING	SILICONE WITH NYLON THREAD	1
7	GROMMET	RUBBER	4
8	FRICTION RING	NYLON	1
9	COMPRESSION NUT	NYLON	1
10	CABLE GLOVE	SILICONE	1

NOTE:
1. "ACCEPT CABLE RANGE FROM .562" TO 1.00""

DOCUMENT STATUS	P1	RELEASE DATE	2019/10/16 04:07:04

THIS DRAWING CONTAINS INFORMATION THAT IS PROPRIETARY TO MOLEX ELECTRONIC TECHNOLOGIES, LLC AND SHOULD NOT BE USED WITHOUT WRITTEN PERMISSION

SYMBOLS: = 0 (FA), = 0 (FC), = 0 (FE), = 0 (S), = 0, = 0 (C), = 0, = 0, = 0

DIMENSION UNITS: INCH[MM] SCALE: NTS

GENERAL TOLERANCES (UNLESS SPECIFIED)

	MM	INCH
4 PLACES	±	±
3 PLACES	±	±
2 PLACES	±	±
1 PLACE	±	±
0 PLACES	±	±
ANGULAR TOL	± °	

DRAFT WHERE APPLICABLE MUST REMAIN WITHIN DIMENSIONS

CURRENT REV DESC:

EC NO: 617525
DRWN: SRPATIL 2019/02/15
CHK'D: DNGUYEN62 2019/05/30
APPR: HKNEELAND 2019/10/16

INITIAL REVISION:
DRWN: SRPATIL 2019/02/15
APPR: HKNEELAND 2019/10/16

THIRD ANGLE PROJECTION

DRAWING: C-SIZE
SERIES: 130147

molex

WATERTITE CONNECTOR MOTOR BASE TURNEX
3P3W NON-NEMA

PRODUCT CUSTOMER DRAWING

DOCUMENT NUMBER	DOC TYPE	DOC PART	REVISION
1301470090	PSD	000	A

MATERIAL NUMBER	CUSTOMER	SHEET NUMBER
SEE TABLE	GENERAL MARKET	1 OF 1

FORMAT: Eng-legal-master-tb-prod-C
REVISION: D
DATE: 2018/01/18