ORDER NO.	WOODHEAD NO.	COLOR
130145-0019	26T76	BLACK
130145-0020	26T76YL	YELLOW

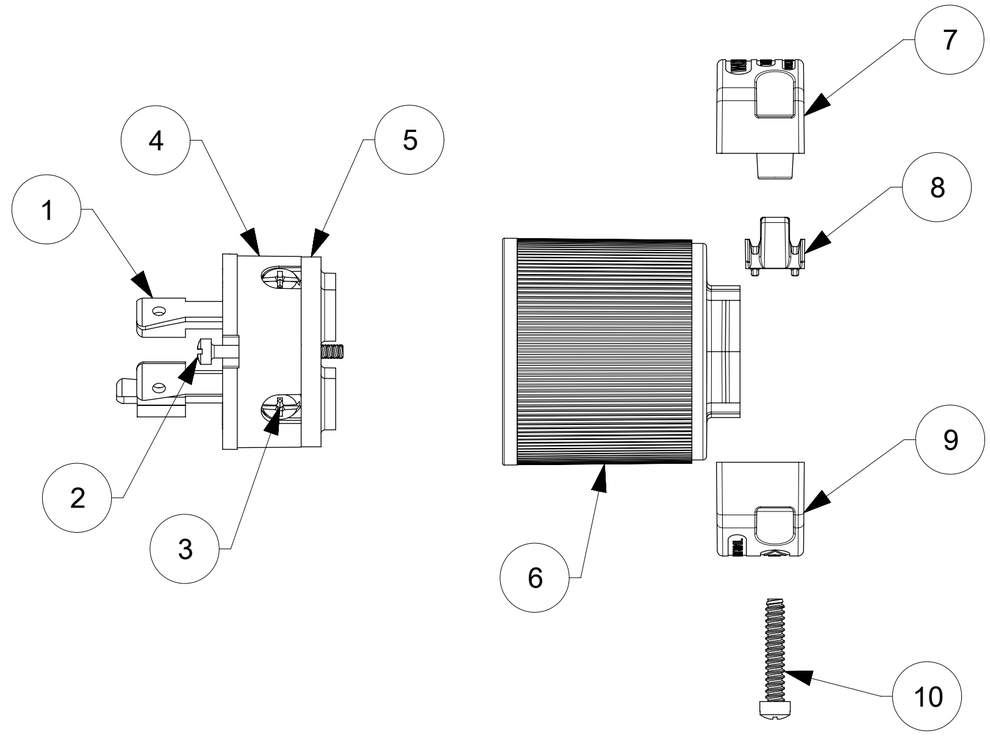

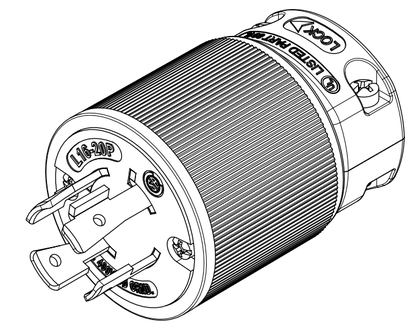

FACE VIEW

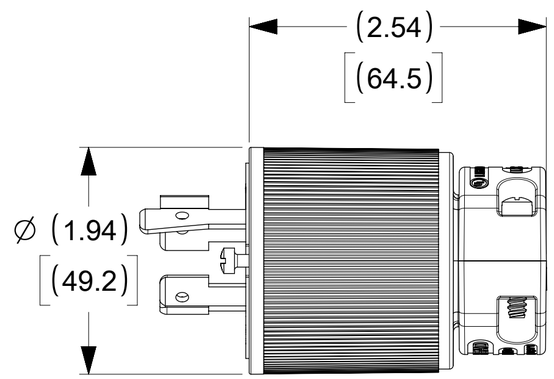

WIRING TERMINATION

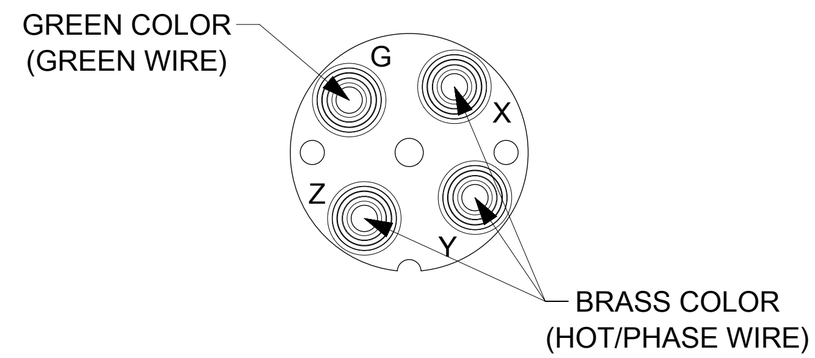

ITEM NO.	DESCRIPTIONS	MATERIAL	QTY.
1	BLADES	BRASS, NICKEL PLATED	4
2	RETAINING SCREWS	STAINLESS STEEL	2
3	TERMINAL SCREWS/CLAMP ASSEMBLY	BRASS, ZINC PLATED	4
4	INSERT	NYLON	1
5	TERMINAL COVER	POLYCARBONATE	1
6	HOUSING	NYLON	1
7	CLAMP CORD MALE	NYLON	1
8	CLAMP CORD INSERT	NYLON	1
9	CLAMP CORD FEMALE	NYLON	1
10	RETAINING SCREWS	STAINLESS STEEL	2

DOCUMENT STATUS	P1	RELEASE DATE	2020/08/27 21:16:26

THIS DRAWING CONTAINS INFORMATION THAT IS PROPRIETARY TO MOLEX ELECTRONIC TECHNOLOGIES, LLC AND SHOULD NOT BE USED WITHOUT WRITTEN PERMISSION

SYMBOLS: FA = 0; FC = 0; FD = 0; S = 0; ▼ = 0; C = 0; ☒ = 0; ■ = 0; V = 0

DIMENSION UNITS: INCH[MM] — SCALE: NTS

GENERAL TOLERANCES (UNLESS SPECIFIED)

	MM	INCH
4 PLACES	±	±
3 PLACES	±	±
2 PLACES	±	±
1 PLACE	±	±
0 PLACES	±	±
ANGULAR TOL	± °	

DRAFT WHERE APPLICABLE MUST REMAIN WITHIN DIMENSIONS

CURRENT REV DESC: NEW RELEASE

EC NO: 621329
DRWN: VBASUTHKARP 2019/02/14
CHK'D: VBASUTHKARP 2020/01/17
APPR: HKNEELAND 2020/08/27

INITIAL REVISION:
DRWN: VBASUTHKARP 2019/02/14
APPR: HKNEELAND 2020/08/27

THIRD ANGLE PROJECTION | DRAWING: C-SIZE | SERIES: 130145

molex

SAFEWAY PLUG TURNEX 3P4W L16-20

PRODUCT CUSTOMER DRAWING

DOCUMENT NUMBER	DOC TYPE	DOC PART	REVISION
1301450019	PSD	000	A

MATERIAL NUMBER	CUSTOMER	SHEET NUMBER
SEE TABLE	GENERAL MARKET	1 OF 1

FORMAT: Eng-tega-master-tb-prod-C
REVISION: D
DATE: 2018/01/18