ORDER NO.	WOODHEAD NO.	COLOR
130147-0064	27W81MB	YELLOW

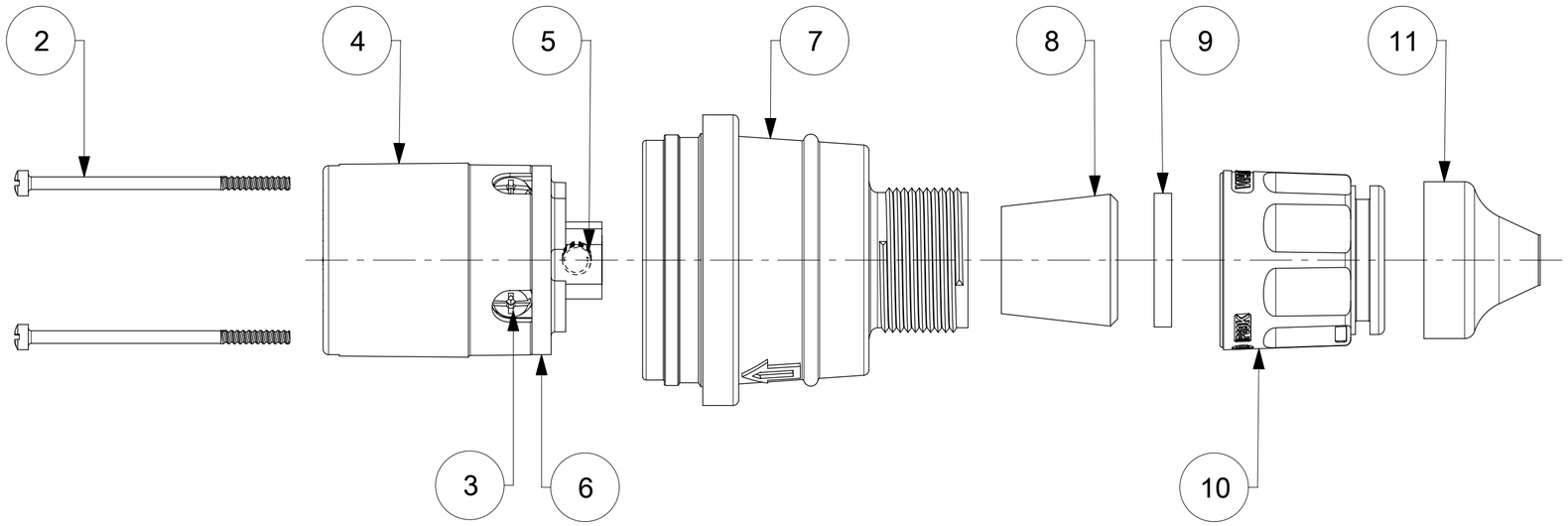

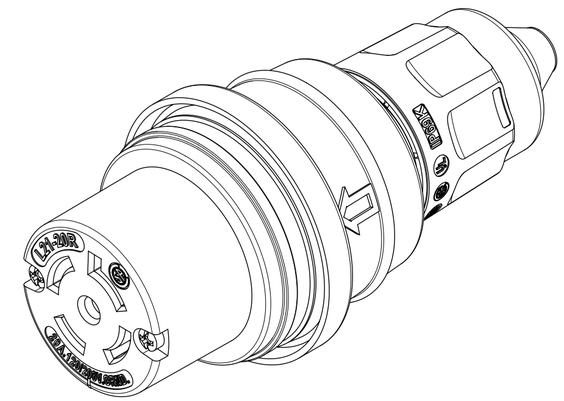

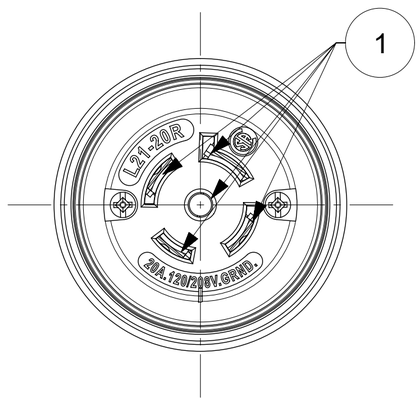

FACE VIEW

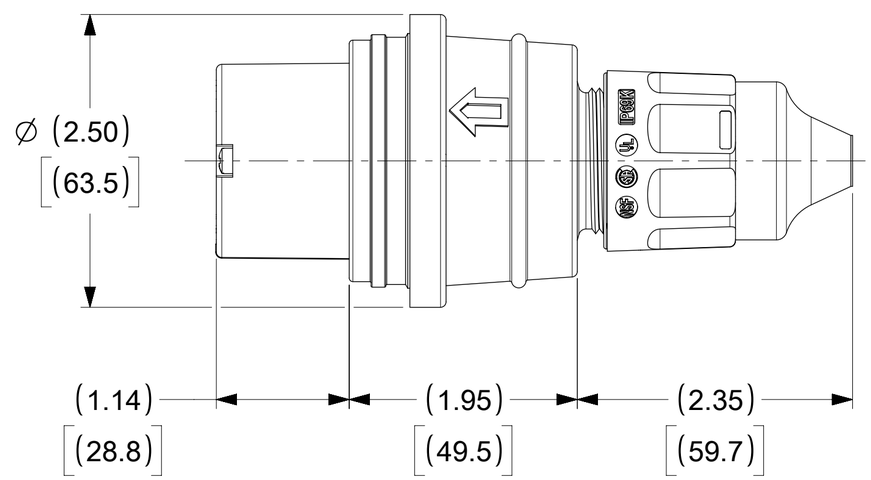

ITEM NO.	DESCRIPTIONS	MATERIAL	QTY.
1	BLADE	BRASS, NICKEL PLATED	5
2	RETAINING SCREWS	STAINLESS STEEL	2
3	CLAMP AND TERMINAL SCREW ASSY	BRASS, ZINC PLATED	4
4	INSERT	NYLON	1
5	SET SCREW	STAINLESS STEEL	1
6	TERMINAL COVER	POLYCARBONATE	1
7	HOUSING	SILICONE WITH NYLON THREAD	1
8	GROMMET	RUBBER	3
9	FRICTION RING	NYLON	1
10	COMPRESSION NUT	NYLON	1
11	CABLE GLOVE	SILICONE	1

NOTE:
1. ACCEPT CABLE RANGE FROM .437" TO .750"

THIS DRAWING CONTAINS INFORMATION THAT IS PROPRIETARY TO MOLEX ELECTRONIC TECHNOLOGIES, LLC AND SHOULD NOT BE USED WITHOUT WRITTEN PERMISSION

SYMBOLS: A = 0; E = 0; F = 0; S = 0; ▼ = 0; C = 0; ☒ = 0; ■ = 0; V = 0

DIMENSION UNITS: INCH[MM] | SCALE: NTS

GENERAL TOLERANCES (UNLESS SPECIFIED)

	MM	INCH
4 PLACES	±	±
3 PLACES	±	±
2 PLACES	±	±
1 PLACE	±	±
0 PLACES	±	±
ANGULAR TOL	± °	

DRAFT WHERE APPLICABLE MUST REMAIN WITHIN DIMENSIONS

CURRENT REV DESC:

EC NO: 617712
DRWN: DSOPPIN 2019/01/15
CHK'D: DNGUYEN62 2019/06/03
APPR: HKNEELAND 2019/10/16

INITIAL REVISION:
DRWN: DSOPPIN 2019/01/15
APPR: HKNEELAND 2019/10/16

THIRD ANGLE PROJECTION | DRAWING: C-SIZE | SERIES: 130147

molex

WATERTITE CONNECTOR MOTOR BASE
4P5W L21-20

PRODUCT CUSTOMER DRAWING

DOCUMENT NUMBER	DOC TYPE	DOC PART	REVISION
1301470064	PSD	000	A

MATERIAL NUMBER	CUSTOMER	SHEET NUMBER
SEE TABLE	GENERAL MARKET	1 OF 1

DOCUMENT STATUS	P1	RELEASE DATE	2019/10/16 03:48:26

FORMAT: Eng-lega-master-tb-prod-C
REVISION: D
DATE: 2018/01/18