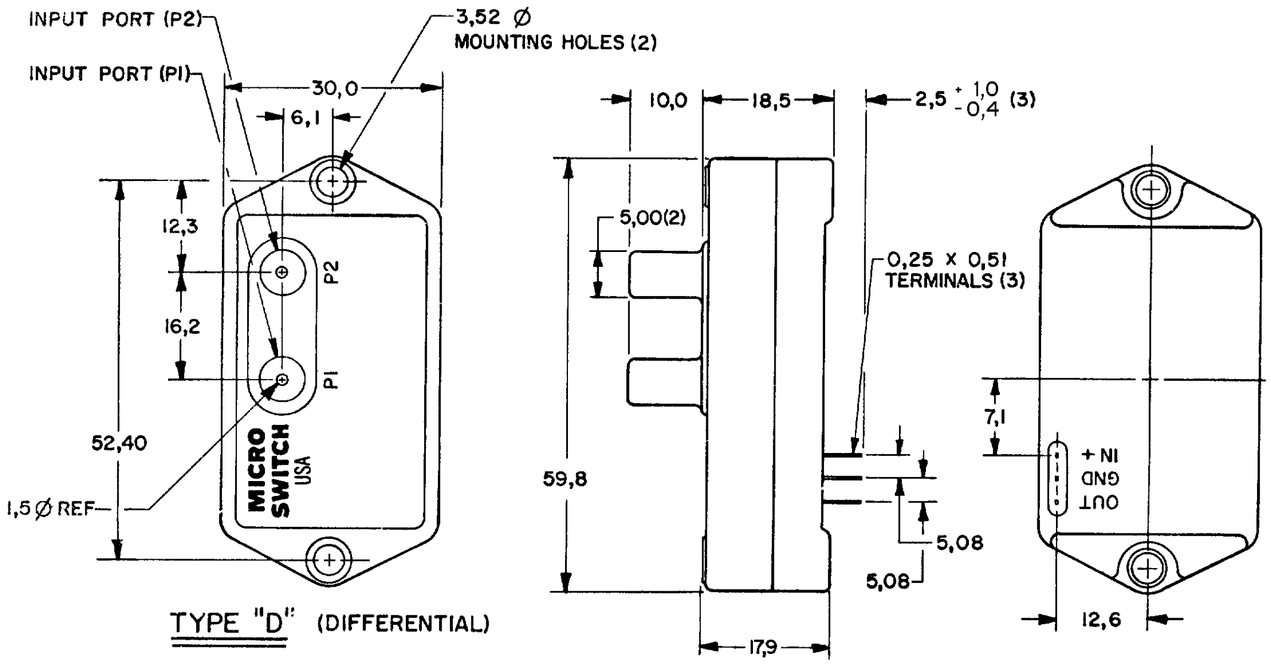

TYPE "D" (DIFFERENTIAL)

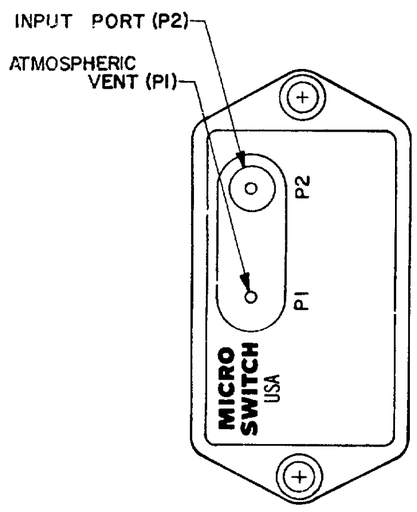

TYPE "G" (GAGE)

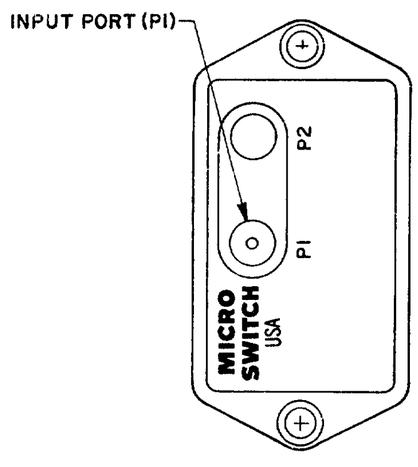

TYPE "A" (ABSOLUTE)

METRIC	INCH
0,4	.016
0,25	.010
0,51	.020
1,0	.039
1,5	.04
2,5	.099
3,52	.139
5,00	.197
5,08	.200
6,1	.240
7,1	.280
10,0	.39
12,3	.484
12,6	.496
16,2	.64
17,9	.70
18,5	.73
30,0	1.18
52,40	2.06
59,8	2.35

M 140PC01 SERIES CHART 1

CATALOG LISTING	TYPE	OPERATING PRESSURE RANGE
141PC01D	D	0 TO -1.0 PSID
(B)	G	0 TO -1.0 PSIG
142PC01D	D	0 TO 1.0 PSID
142PC01G	G	0 TO 1.0 PSIG

GENERAL OPERATING CHARACTERISTICS	
PRESSURE RANGE	0 TO 51.7 mmHg (0 TO 1 PSI)
OVERPRESSURE	1035 mmHg (20 PSI)
TEMPERATURE RANGES	STORAGE -55 TO +125°C OPERATE -40 TO +85°C COMPENSATED -18 TO +63°C
SUPPLY VOLTAGE	7 TO 16 VDC
SUPPLY CURRENT	20 mA MAX WITH 10K LOAD
SHORT CIRCUIT LIMIT	MAY BE SHORTED INDEFINITELY
OUTPUT RIPPLE	NONE
GROUND REFERENCE	SUPPLY AND OUTPUT ARE COMMON

ELECTRICAL PERFORMANCE AT 25°C AND 8.00 ± 0.01 VDC SUPPLY	
OUTPUT VOLTAGE	
141PC01D OR G	
NULL (0 PSIG)	1.00 ± 0.05 VDC
FULL SCALE (1.0 PSIG [51.7 mmHg])	6.00 ± .100 VDC (P2 < P1)
F.S.O. (5)	5.00 ± 0.05 VDC (P2 < P1)
142PC01D OR G	
NULL (0 PSIG)	1.00 ± 0.05 VDC
FULL SCALE (1.0 PSIG [51.7 mmHg])	6.00 ± 0.10 VDC (P2 > P1)
F.S.O. (5)	5.00 ± 0.05 VDC (P2 > P1)
SENSITIVITY	96.7 mV/mmHg (5.0 V/PSI)
LINEARITY (% F.S.O.) (5) (BFSL)	± 0.75 MAX (P2 < P1) ± 1.50 MAX (P2 > P1)
HYSTERESIS & REPEATABILITY (% F.S.O.) (5)	± 0.3 TYPICAL
TEMPERATURE ERROR (% F.S.O.) (5) 5° < 25° > 45°C	± 1.5% MAX
RESPONSE TIME	1 m SEC MAX TYP

NOTES
1 - INPUT MEDIA:
P1 - DRY GASES ONLY; CONNECTION SIDE OF SENSOR
P2 - LIMITED ONLY TO THOSE MEDIA THAT WILL NOT ATTACK POLYESTER SILICON, OR SILICONE BASED ADHESIVE
2 - TERMINALS ARE PLATED FOR SOLDERING
3 - LIMIT SOLDERING TO 315°C MAX FOR 10 SECONDS MAX
4 - UNITS ARE OF PLASTIC CONSTRUCTION
(5) F.S.O. IS THE ALGEBRAIC DIFFERENCE BETWEEN THE OUTPUT END POINTS (NULL AND FULL PRESSURE)

DRAWING NUMBER M 140PC01 SERIES CHART 1 PAGE 1 OF 1
ISSUE 12
RELEASE NO. DR-2103-3 REPLACES
REVISIONS
A CO-95394 3 FEB 00
B 201727 CSL 1 MAR 01
CHECK
CHECK SAV 8 FEB 00
CHECK
RASTER
DRAWN DLM 3FEB00

THIS DRAWING COVERS A PROPRIETARY ITEM AND IS THE PROPERTY OF MICRO SWITCH, A DIVISION OF HONEYWELL. THIS DRAWING IS NOT TO BE COPIED OR USED WITHOUT THE APPROVAL OF MICRO SWITCH.

MICRO SWITCH a Honeywell Division
FED. MFG. CODE 81929

PRESSURE TRANSDUCER

CATALOG LISTING
140 PC 01 SERIES
CHART 1

THIRD ANGLE PROJECTION
SCALE NONE
DO NOT SCALE PRINT
UNLESS OTHERWISE SPECIFIED TOLERANCES ARE

NO PLACE	(0)	± 1 mm
ONE PLACE	(0.0)	± 0.4 mm
TWO PLACE	(0.00)	± 0.15 mm
ANGLES		±

WEIGHT 31 GRAMS