MATERIALS AND FINISHES:

BODY ZINC ALLOY
SEE TABLE

INSULATOR TEFLON

CONTACT (MATING END) BERYLLIUM COPPER
PLATED GOLD

CONTACT (PCB END) BRASS
PLATED GOLD

COVER BRASS
SEE TABLE

PACKAGING SEE TABLE

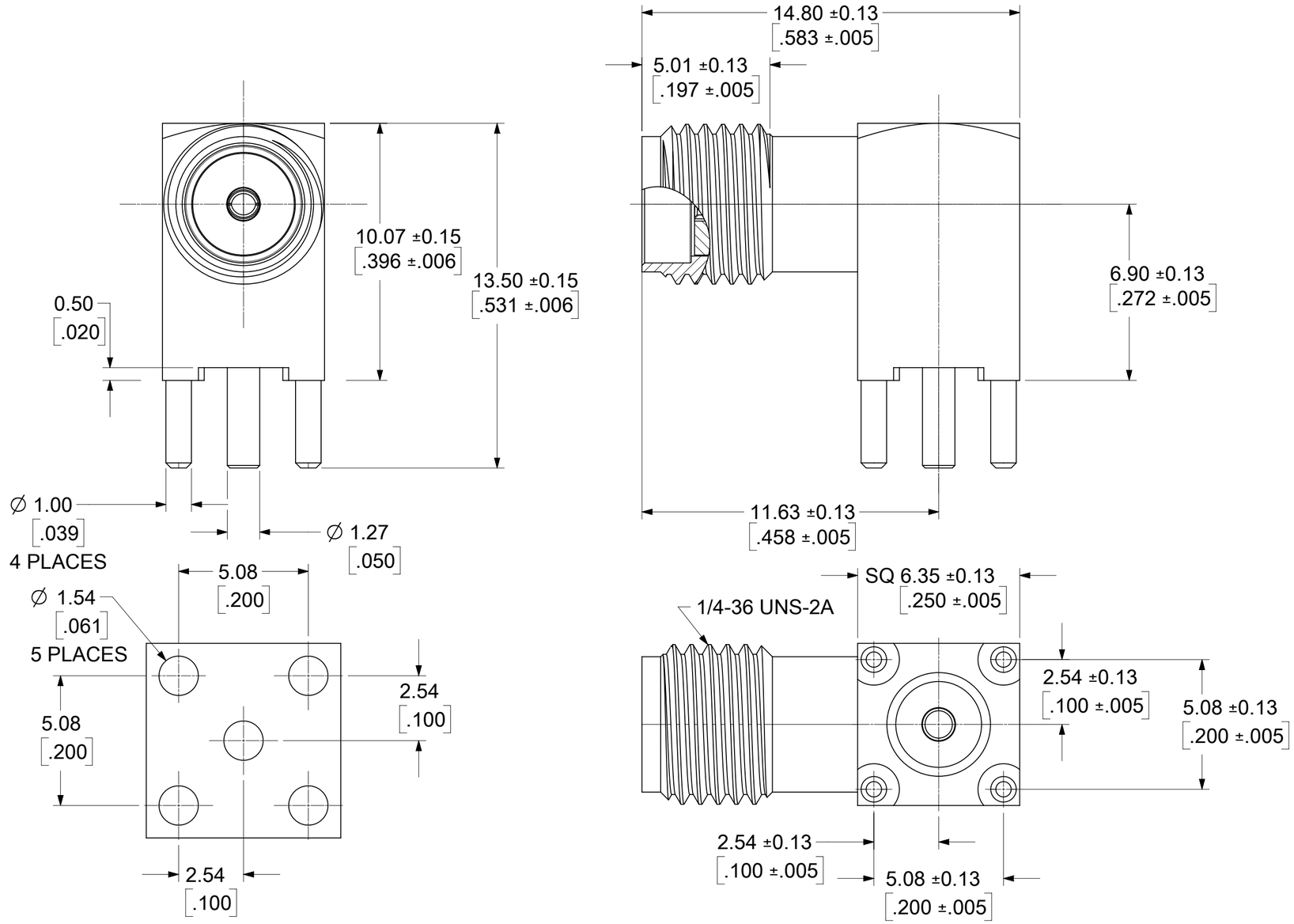

PART NO.	DESCRIPTION	PACHAGING
73391-0085	BODY, PIN, AND COVER PLATED GOLD 1u" MIN	73391-0083 BAG (500 SET.)
73391-0084	BODY, AND COVER PLATED NICKEL	73391-0080 BAG (500 SET.)
73391-0083	BODY, PIN, AND COVER PLATED GOLD 1u" MIN	73391-0083 TRAY (80 CAV.)
73391-0082	BODY, AND COVER PLATED NICKEL	73391-0080 TRAY (20 CAV.)
73391-0081	BODY, PIN, AND COVER PLATED GOLD 10u" MIN	73391-0081 TRAY (80 CAV.)
73391-0080	BODY, AND COVER PLATED NICKEL	73391-0080 TRAY (80 CAV.)

SPECIFICATION	DESCRIPTION
MIL-STD-348A, FIG. 310.1	INTERFACE
PS-73598-0111	SPECIFICATION

THIS DRAWING CONTAINS INFORMATION THAT IS PROPRIETARY TO MOLEX ELECTRONIC TECHNOLOGIES, LLC AND SHOULD NOT BE USED WITHOUT WRITTEN PERMISSION

FUNCTIONAL SYMBOLS: FA = 0, FC = 0, FP = 0

DIVISIONAL SYMBOLS

DIMENSION UNITS	SCALE
MM/INCH	NTS

GENERAL TOLERANCES (UNLESS SPECIFIED)

ANGULAR TOL	± 2.0 °
4 PLACES	±
3 PLACES	±
2 PLACES	±
1 PLACE	±
0 PLACES	±

DRAFT WHERE APPLICABLE MUST REMAIN WITHIN DIMENSIONS

CURRENT REV DESC:
EWR-14242-A
ADDED -0084 & -0085 PART NO

EC NO: 653474
DRWN: JSU18 2020/12/17
CHK'D: YCHENG 2021/02/09
APPR: YCHENG 2021/02/09

INITIAL REVISION:
DRWN: RFC_PLMIMP 2018/01/09
APPR: MHUANG 2006/08/29

THIRD ANGLE PROJECTION | DRAWING: C-SIZE | SERIES: 73391

molex

SMA JACK R/A
PCB TH 50 OHMS SMA-J/PCB

PRODUCT CUSTOMER DRAWING

DOCUMENT NUMBER	DOC TYPE	DOC PART	REVISION
SD-73391-008	PSD	001	A8

MATERIAL NUMBER	CUSTOMER	SHEET NUMBER
SEE TABLE	GENERAL MARKET	1 OF 1

DOCUMENT STATUS	P1	RELEASE DATE	2021/02/09 07:35:34

FORMAT: master-tb-prod-C
REVISION: J
DATE: 2020/01/14