A
board drillings

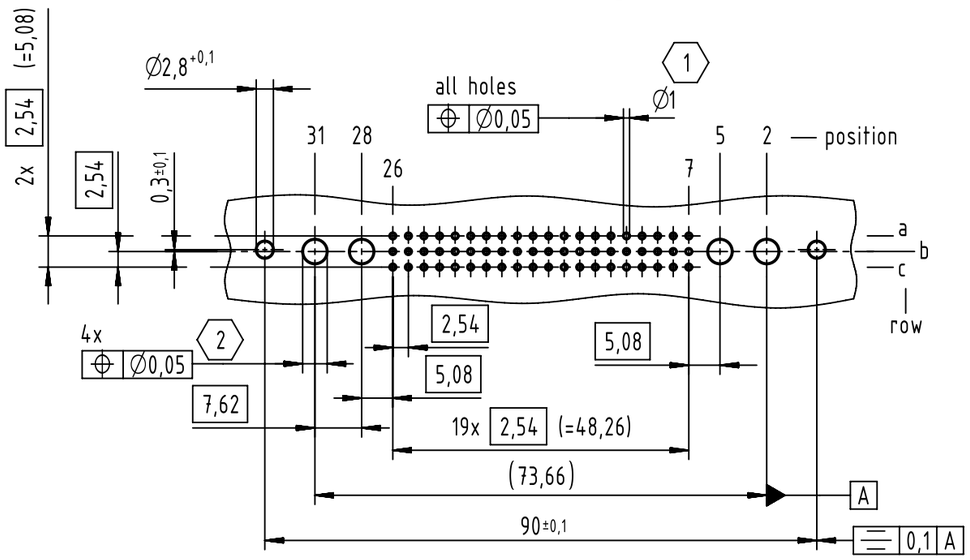

A
contact arrangement

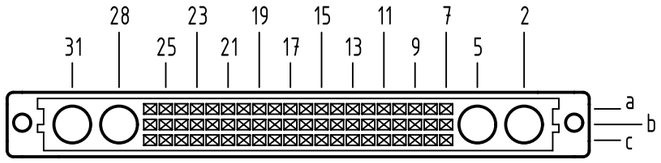

60 press-in contacts

⊠ = press-in contact

□ = position without contact

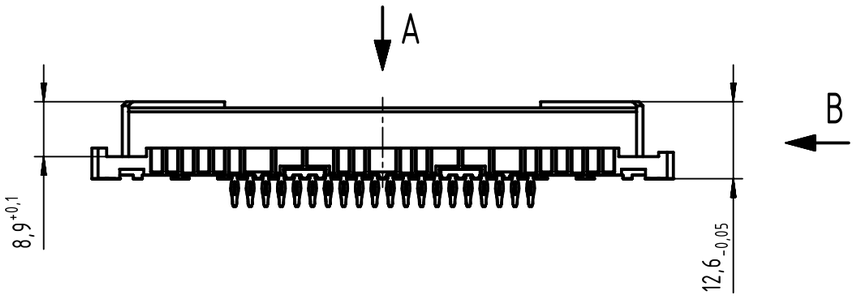

B (2:1)

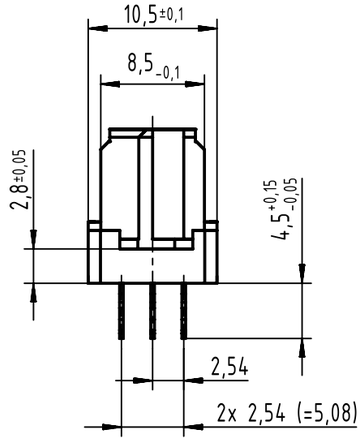

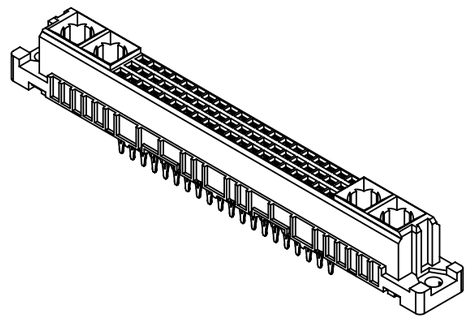

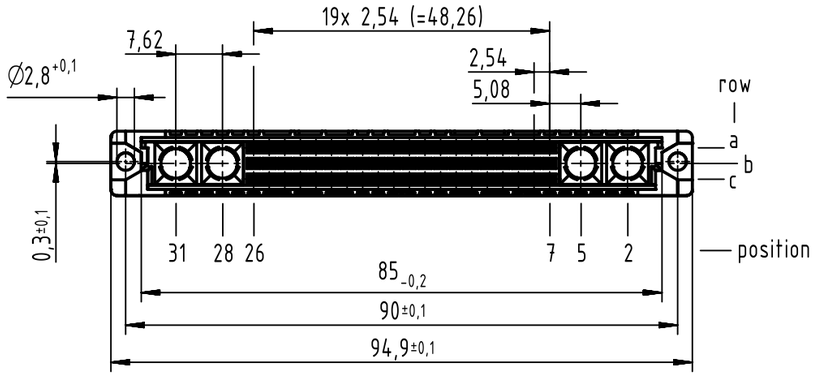

(2) hole diameter is to be co-ordinated with the respective contact

(1) recommended configuration of plated holes and further information see: DS 09032100001

09 03 260 6830	2
part no.	performance level (1)

All Dimensions in mm Original Size DIN A3	Scale 1:1	Free size tol. IEC 60603-2		Ref. / Sub.	
All rights reserved	Created by ZWAHR	Inspected by LEHNERT	Standardisation HOFFMANN	Date 2017-01-20	State Final Release
Department EL PD	Title DIN Signal type M60-flat female press-in 4.5 60-pole				Doc-Key / ECM-Nr. 100072218/UGD/057/D 500000114095
HARTING Electronics GmbH D-32339 Espelkamp	Type TB	Number 0903260X830		Rev. D	Page 1/1

A3