| MATERIAL NO. | ENGINEERING NO. | FINISHED LENGTH |
|---|---|---|
| 1300640453 | CC4030K17M010G | 1M (3 FT 3.37 IN) |
| 1300640515 | CC4030K17M650G | 65M (213 FT 3.06 IN) |
| 1300642118 | CC4030K17T130G | 130M (426 FT 6.11 IN) |

(C)

(C) CABLE LENGTH TOLERANCES
<.3M [1FT]: +19mm-0 [ +.75in-0]
.3 - .9M [1 - 3FT]: +44.5mm-0 [+1.75in-0]
.9 - 1.8M [3 - 6FT]: +55.6mm-0 [+2.19in-0]
1.8 - 3.7M [6 - 12FT: +88.9mm-0 [+3.50in-0]
3.7 - 7.3M [12 - 24FT]: +165.1mm-0 [+6.50in-0]
7.3-14.6M [24 - 48FT]: +317.5mm-0 [+12.50in-0]
14.6 - 30.5M [48-100FT]: +622.3mm-0 [+24.50in-0]
OVER 30M [100FT] +2% OF FINISHED LENGTH

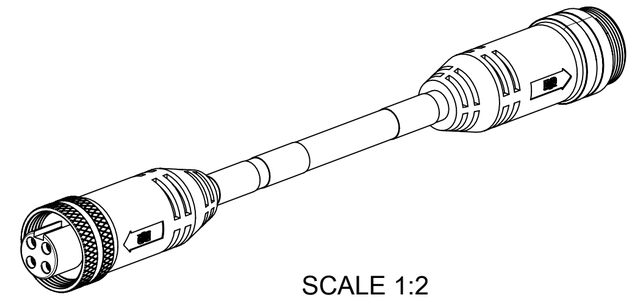

SCALE 1:2

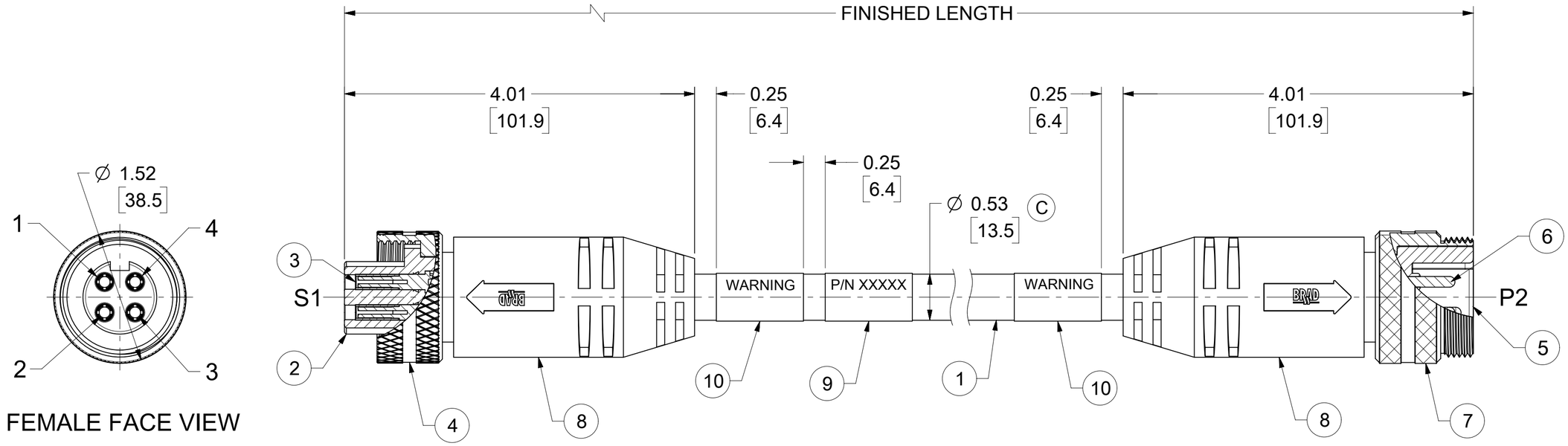


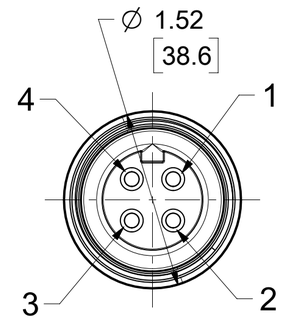


NOTES:
1. MATERIAL: AS NOTED
2. FINISH: AS NOTED
3. ELECTRICAL:
   VOLTAGE: 500V PER IEC60664 (C)
   600V PER UL2237
   CURRENT: 32A
4. TEMP RATING: -20°C TO +90°C
5. PROTECTION: IP67 (WHEN MATED)
6. UL LISTED FILE: 258922
7. COUPLING THREAD: 1 3/8"-16 UN
8. ALL DIMS ARE FOR REFERENCE UNLESS TOLERANCED OR NOTED OTHERWISE

## WIRING DIAGRAM

| S1 | | P2 |
|---|---|---|
| 1 | BLACK #1 | 1 |
| 2 | GREEN/YELLOW | 2 |
| 3 | BLACK #3 | 3 |
| 4 | BLACK #2 | 4 |

## PART NUMBER LEGEND (C)

CC4030K17M010G

FINISHED LENGTH
M001 = 0.1 METER
M010 = 1.0 METER
M100 = 10.0 METER
T100 = 100 METER

| ITEM | DESCRIPTION | MATERIAL | FINISH | |
|---|---|---|---|---|
| 10 | WARNING LABEL | VINYL | ORANGE/BLACK | (C) |
| 9 | WRAP LABEL | VINYL | BLACK/YELLOW | (C) |
| 8 | OVERMOLD | TPE | BLACK | (C) |
| 7 | MALE COUPLING NUT | ALUMINIUM | CLEAR ANODIZE | |
| 6 | PIN CONTACT | Cu ALLOY | GOLD OVER NICKEL | |
| 5 | MALE INSERT | TPE | BLACK | (C) |
| 4 | FEMALE COUPLING NUT | ALUMINIUM | CLEAR ANODIZE | |
| 3 | SOCKET CONTACT | Cu ALLOY | GOLD OVER NICKEL | |
| 2 | FEMALE INSERT | TPE | BLACK | (C) |
| 1 | CABLE, #10-4, TC-ER | TPE | BLACK | |

| DOCUMENT STATUS | P1 | RELEASE DATE | 2022/06/14 13:48:43 |
|---|---|---|---|

THIS DRAWING CONTAINS INFORMATION THAT IS PROPRIETARY TO MOLEX ELECTRONIC TECHNOLOGIES, LLC AND SHOULD NOT BE USED WITHOUT WRITTEN PERMISSION

FUNCTIONAL SYMBOLS
FA = 0
FC = 0
FP = 0
DIVISIONAL SYMBOLS

DIMENSION UNITS: INCH/MM
SCALE: 1:1

GENERAL TOLERANCES (UNLESS SPECIFIED)

| | MM | INCH |
|---|---|---|
| 4 PLACES | ± | ± |
| 3 PLACES | ± | ± |
| 2 PLACES | ± | ± |
| 1 PLACE | ± | ± |
| 0 PLACES | ± | ± |
| ANGULAR TOL | ± ° | |

DRAFT WHERE APPLICABLE MUST REMAIN WITHIN DIMENSIONS

CURRENT REV DESC: UPDATED ITEM #2,5,8 WERE PVC, 9&10, WERE PLASTIC FILM, PART NO. LEGEND ADDED MATERIAL TABLE,TOL. TABLE, IEC VOLT & CABLE DIA.

EC NO: 709714
DRWN: VHANDI 2020/05/29
CHK'D: RSTONE 2022/06/08
APPR: BWOODMAN 2022/06/14

INITIAL REVISION:
DRWN: BRUPERT 2011/11/09
APPR: BWOODMAN 2014/09/04

molex

BRAD POWER, M35
4 POLE, FEMALE-MALE, STRAIGHT, SINGLE KEY
10 AWG

PRODUCT CUSTOMER DRAWING

| THIRD ANGLE PROJECTION | DRAWING | SERIES | MATERIAL NUMBER | CUSTOMER | SHEET NUMBER |
|---|---|---|---|---|---|
| | C-SIZE | 130064 | SEE TABLE | GENERAL MARKET | 1 OF 1 |

| DOCUMENT NUMBER | DOC TYPE | DOC PART | REVISION |
|---|---|---|---|
| SD-130064-006 | PSD | 001 | C |

FORMAT: Eng-tega-master-tb-prod-C
REVISION: E
DATE: 2020/01/14