PART NO	ENGINEERING NO.	FINISHED LENGTH
1300580125	ERWPAB3004M005	0.5M [1FT 7 IN]
1300580304	ERWPAB3004M050	5M [16FT 5 IN]
1300580308	ERWPAB3004M100	10M [32FT 9 IN]

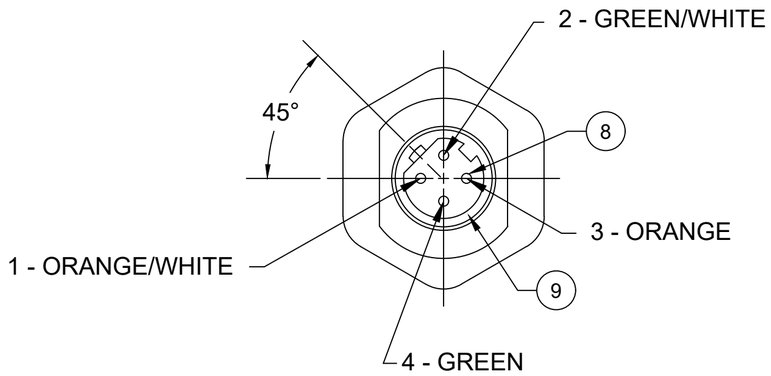

FEMALE MIC RECEPTACLE FRONT VIEW

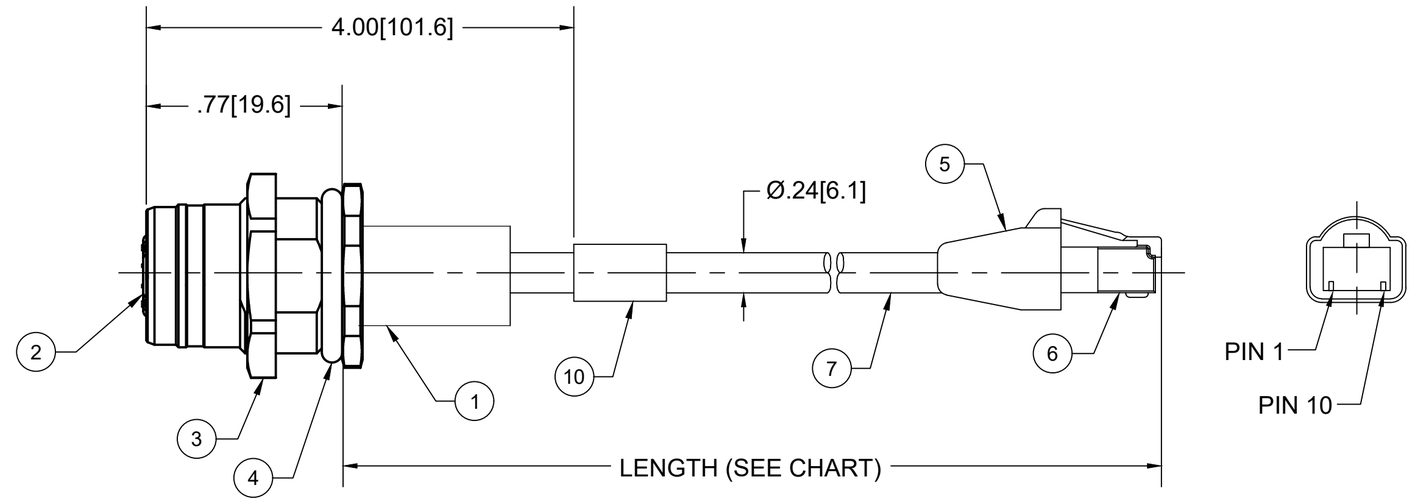

NOTES:
1. MATERIAL: AS NOTED
2. FINISH: AS NOTED
3. ELECTRICAL:
   VOLTAGE: 125V
   CURRENT: 1.5A
4. TEMP RATING: -20°TO +75°C
5. PROTECTION: IP67 (WHEN MATED)
6. UL E200650
7. ALL DIMENSIONS ARE FOR REFERENCE UNLESS TOLERANCED OR NOTED OTHERWISE

M12 FEMALE RECEPTACLE	RJ-45 CONNECTOR 10 BASE-T
PIN 1 - ORANGE/WHITE	PIN 1 - ORANGE/WHITE
PIN 2 - GREEN/WHITE	PIN 2 - ORANGE
PIN 3 - ORANGE	PIN 3 - GREEN/WHITE
PIN 4 - GREEN	PIN 4 - NO CONNECTION
	PIN 5 - NO CONNECTION
	PIN 6 - GREEN
	PIN 7 - NO CONNECTION
	PIN 8 - NO CONNECTION

MECHANICAL CHARACTERISTICS:

FLEX LIFE:	(126 CYCLES/MIN @ 20º C) 1 MILLION CYCLE TEST (10X CABLE O.D., MINIMUM RADIUS) 10 MILLION CYCLE TEST (20X CABLE O.D., MINIMUM RADIUS)
TORSIONAL FLEX:	(1 LB LOAD, 360º, 71 CYCLES/MIN @ 20º C) 3 MILLION CYCLE TEST

PART NO. MATRIX

ERWPAB3004M005

FINISHED LENGTH:

M005= 0.5 METER
M010= 1 METER
M100= 10 METER

CABLE LENGTH TOLERANCES
<.3M [1FT]: +19mm-0 [+.75in-0]
.3 - .9M [1 - 3FT]: +44.5mm-0 [+1.75in-0]
.9 - 1.8M [3 - 6FT]: +55.6mm-0 [+2.19in-0]
1.8 - 3.7M [6 - 12FT: +88.9mm-0 [+3.50in-0]
3.7 - 7.3M [12 - 24FT]: +165.1mm-0 [+6.50in-0]
7.3-14.6M [24 - 48FT]: +317.5mm-0 [+12.50in-0]
14.6 - 30.5M [48-100FT]: +622.3mm-0 [+24.50in-0]
OVER 30M [100FT] +2% OF FINISHED LENGTH

10	WRAP LABEL	VINYL	BLACK/YELLOW
9	GASKET	VITON	RED
8	CONTACT PIN FEMALE	COPPER ALLOY	GOLD PLATED
7	CABLE, ETHERNET, 24-4	TPE JACKET	TEAL
6	RJ45 MODULAR PLUG	POLYCARBONATE	---
5	RJ45 BOOT HOODED	PVC	BLACK
4	O-RING	NITRILE	BLACK
3	LOCKNUT	BRASS	NICKEL PLATED
2	FEMALE INSERT	PUR	BLACK
1	RECEPTACLE SHELL	BRASS	NICKEL PLATED
ITEM	COMPONENT	MATERIAL	FINISH

THIS DRAWING CONTAINS INFORMATION THAT IS PROPRIETARY TO MOLEX ELECTRONIC TECHNOLOGIES, LLC AND SHOULD NOT BE USED WITHOUT WRITTEN PERMISSION

FUNCTIONAL SYMBOLS: FA=0, FC=0, FP=0
DIVISIONAL SYMBOLS

DIMENSION UNITS: INCH/MM
SCALE: NTS

GENERAL TOLERANCES (UNLESS SPECIFIED)

	mm	INCH
4 PLACES	±----	±----
3 PLACES	±----	±----
2 PLACES	±----	±----
1 PLACE	±----	±----
0 PLACES	±----	±----
ANGULAR TOL ± ---- °		

DRAFT WHERE APPLICABLE MUST REMAIN WITHIN DIMENSIONS

CURRENT REV DESC: INITIAL RELEASE

EC NO:	648668	
DRWN:	ABENJAMINLW	2020/09/22
CHK'D:	RSTONE	2020/11/11
APPR:	BWOODMAN	2020/11/18

INITIAL REVISION:

DRWN:	ABENJAMINLW	2020/09/22
APPR:	BWOODMAN	2020/11/18

THIRD ANGLE PROJECTION | DRAWING: C-SIZE | SERIES: 130058

molex

CORD ASSEMBLY, ULTRA LOCK
M12 REC D-CODE FEMALE TO RJ45 PLUG MALE, STRAIGHT, 24-4 ETHERNET CABLE

PRODUCT CUSTOMER DRAWING

DOCUMENT NUMBER	DOC TYPE	DOC PART	REVISION
1300580124	PSD	000	A

MATERIAL NUMBER	CUSTOMER	SHEET NUMBER
SEE CHART	GENERAL MARKET	1 OF 1

DOCUMENT STATUS	P1	RELEASE DATE	2020/11/18 23:03:16

FORMAT: IN-ACAD-tb-prod-C
REVISION: B
DATE: 2020/01/14