THIS COPY IS PROVIDED ON A RESTRICTED BASIS AND IS NOT TO BE USED IN ANY WAY DETRIMENTAL TO THE INTERESTS OF PANDUIT CORP.

PANDUIT P/N	WEIGHT
T45IC	1.63 LB/10 PCS 741.03 g/10 PCS

NOTES:

1. SEE CURRENT CATALOG FOR ADDITIONAL PART SUFFIXES TO INDICATE COLOR AND OR PACKAGE QUANTITY.
2. THIS PRODUCT IS INTENDED TO BE USED WITH PANDUIT TYPE T-45.
3. DIMENSIONS IN PARENTHESIS ARE IN METRIC.

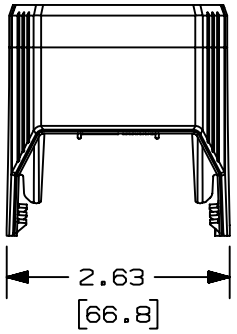

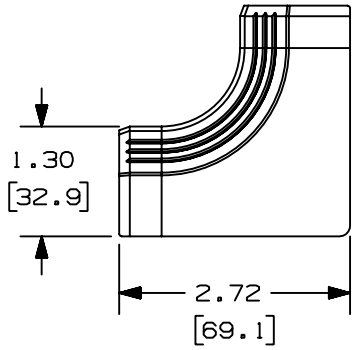

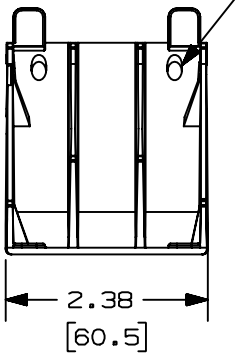

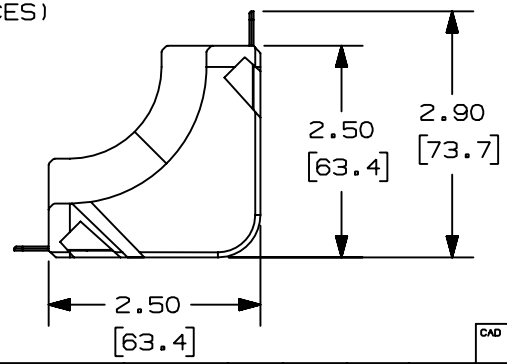

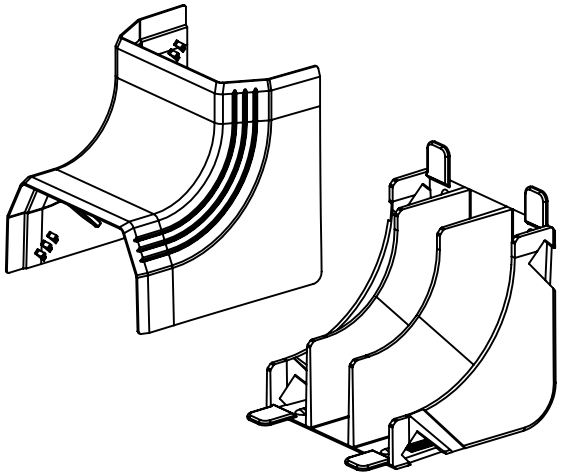

REV	DATE	BY	CHK	DESCRIPTION	ECN	CHK	CUST	SUP
1	01-12-00	RABO	HIW	A. REVISED MOUNTING HOLES	36975-59	HIW	HIW	
R	10-28-99	RABO	HIW	RELEASED TO PRODUCTION.	36975-59	HIW	HIW	

CAD FILENAME/LAYERS: D36975DX_DC_T45IC_00B.PRT

PANDUIT CORP. TINLEY PARK, ILLINOIS

T-45 INSIDE CORNER FITTING
(T45IC)
CUSTOMER DRAWING

UNLESS OTHERWISE SPECIFIED, DIMENSIONAL TOLERANCES ARE:
(.X) ± (.XXX) ±
(.XX) ±.03(.8) ANGLES ±

UNLESS OTHERWISE SPECIFIED, ALL DIMENSIONS ARE GIVEN IN INCHES, THIRD ANGLE PROJECTION.

DRAWN BY: RABO
DATE: 10-28-99
CHECKED BY: BKR
MAT'L: PVC
SCALE: NONE
DRAWING NO.: 36975-59
DWG SIZE: A