PART NO.	ENGINEERING NO.	FINISHED LENGTH
1300060298	103000A03F030	3FT [0.9M]
1300060308	103000A03F150	15FT [4.6M]
1300060313	103000A03F250	25FT [7.6M]

B

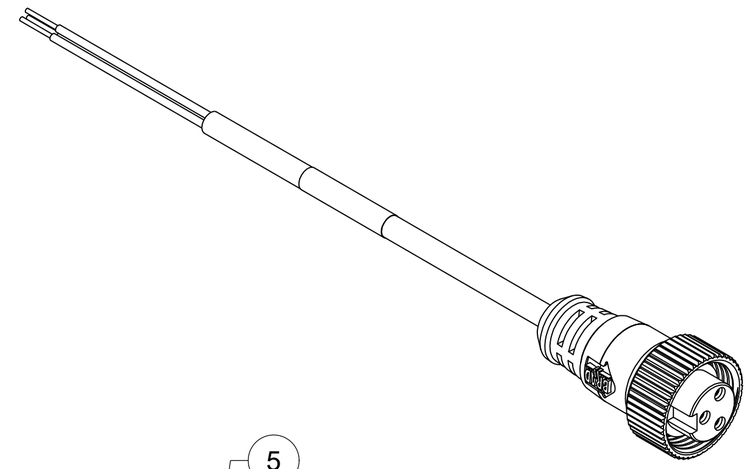

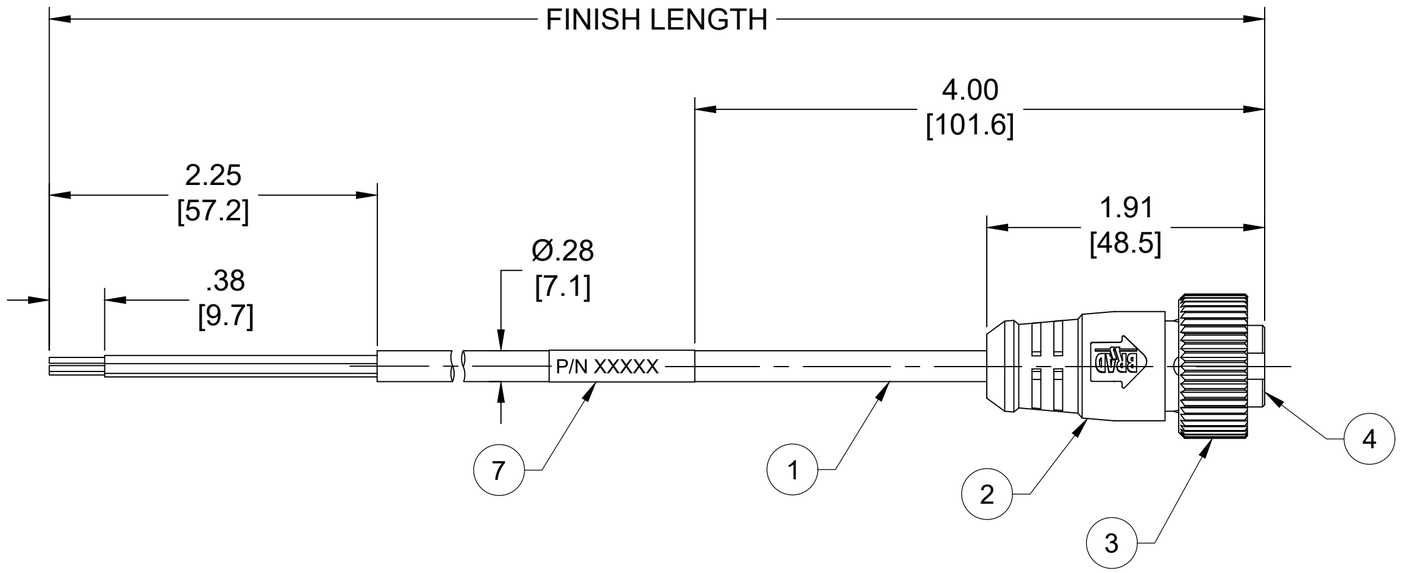

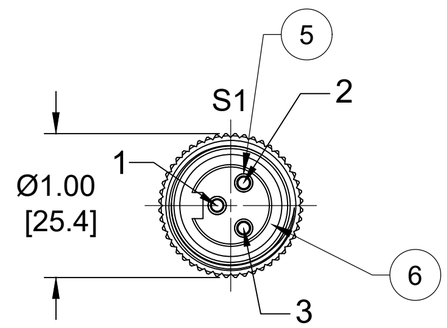

FEMALE FACE VIEW

NOTES:
1. MATERIAL: AS NOTED
2. FINISH: AS NOTED
3. ELECTRICAL:
   VOLTAGE : 300V
   CURRENT: 10A
4. TEMP RATING: -20° TO +105°C
5. PROTECTION: IP67 (WHEN MATED)
6. COUPLING THREAD: 7/8"-16UN
7. UL RECOGNIZED FILE: E152210
   CSA CERTIFIED FILE: LR6837
8. ALL DIMENSIONS ARE FOR REFERENCE UNLESS TOLERANCED OR NOTED OTHERWISE

S1

GREEN-GND	1
RED WITH BLACK	2
RED WITH WHITE	3

WIRING DIAGRAM

B

PART NUMBER LEGEND

103000A03F030

CABLE LENGTH
F050 = 5 FEET
F100 = 10 FEET
F500 = 50 FEET

B

CABLE LENGTH TOLERANCES
<.3M [1FT]: +19mm-0 [+.75in-0]
.3 - .9M [1 - 3FT]: +44.5mm-0 [+1.75in-0]
.9 - 1.8M [3 - 6FT]: +55.6mm-0 [+2.19in-0]
1.8 - 3.7M [6 - 12FT: +88.9mm-0 [+3.50in-0]
3.7 - 7.3M [12 - 24FT]: +165.1mm-0 [+6.50in-0]
7.3-14.6M [24 - 48FT]: +317.5mm-0 [+12.50in-0]
14.6 - 30.5M [48-100FT]: +622.3mm-0 [+24.50in-0]
OVER 30M [100FT] +2% OF FINISHED LENGTH

ITEM	COMPONENT	MATERIAL	FINISH	
7	WRAP LABEL	VINYL	BLACK/YELLOW	B
6	FRICTION RING	NYLON	WHITE	B
5	CONTACT SOCKET	COPPER ALLOY	GOLD OVER NICKEL	
4	INSERT	TPE	YELLOW	B
3	COUPLING NUT	ZINC DIE CAST	BLACK-E-COAT	
2	OVERMOLD	TPE	YELLOW	B
1	CABLE, 18 AWG	PVC	YELLOW	

THIS DRAWING CONTAINS INFORMATION THAT IS PROPRIETARY TO MOLEX ELECTRONIC TECHNOLOGIES, LLC AND SHOULD NOT BE USED WITHOUT WRITTEN PERMISSION

FUNCTIONAL SYMBOLS: FA=0, FC=0, FP=0
DIVISIONAL SYMBOLS

DIMENSION UNITS: INCH/MM
SCALE: NTS

GENERAL TOLERANCES (UNLESS SPECIFIED)

	mm	INCH
4 PLACES	±----	±----
3 PLACES	±----	±----
2 PLACES	±----	±----
1 PLACE	±----	±----
0 PLACES	±----	±----
ANGULAR TOL ± ---- °		

DRAFT WHERE APPLICABLE MUST REMAIN WITHIN DIMENSIONS

CURRENT REV DESC: ITEM# 2 & 4 WERE PVC.ITEM #7 WAS PLASTIC FILM. ADDED ITEM #6, UL NUMBER, PN LEGEND & TOL CHART. MODIFIED PN CHART.

EC NO: 702709
DRWN: ABENJAMINLW 2021/05/20
CHK'D: RSTONE 2022/04/11
APPR: BWOODMAN 2022/04/16

INITIAL REVISION:
DRWN: LHARTMAN 2009/12/29
APPR: JFMURPHY 2010/01/05

THIRD ANGLE PROJECTION

molex

MINI-CHANGE CORDSET, A-SIZE
3-POLE, FEMALE, STRAIGHT, SINGLE KEY,
#18 AWG

PRODUCT CUSTOMER DRAWING

DOCUMENT NUMBER	DOC TYPE	DOC PART	REVISION
SD-130006-029	PSD	001	B

DRAWING	SERIES	MATERIAL NUMBER	CUSTOMER	SHEET NUMBER
C-SIZE	130006	SEE CHART	GENERAL MARKET	1 OF 1

DOCUMENT STATUS	P1	RELEASE DATE	2022/04/16 16:04:52

FORMAT: IN-ACAD-tb-prod-C
REVISION: B
DATE: 2020/01/14

FACE VIEW-FEMALE INSERT

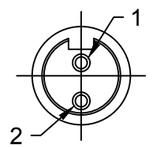	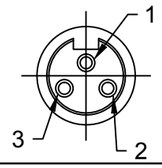	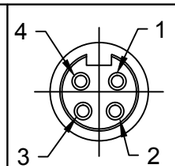	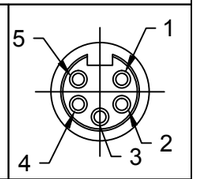
1 BROWN 2 BLUE	1 GREEN 2 RED/BLK 3 RED/WHT	1 RED/BLK 2 RED/WHT 3 RED 4 GREEN	1 RED/WHT 2 RED 3 GREEN 4 RED/YEL 5 RED/BLK

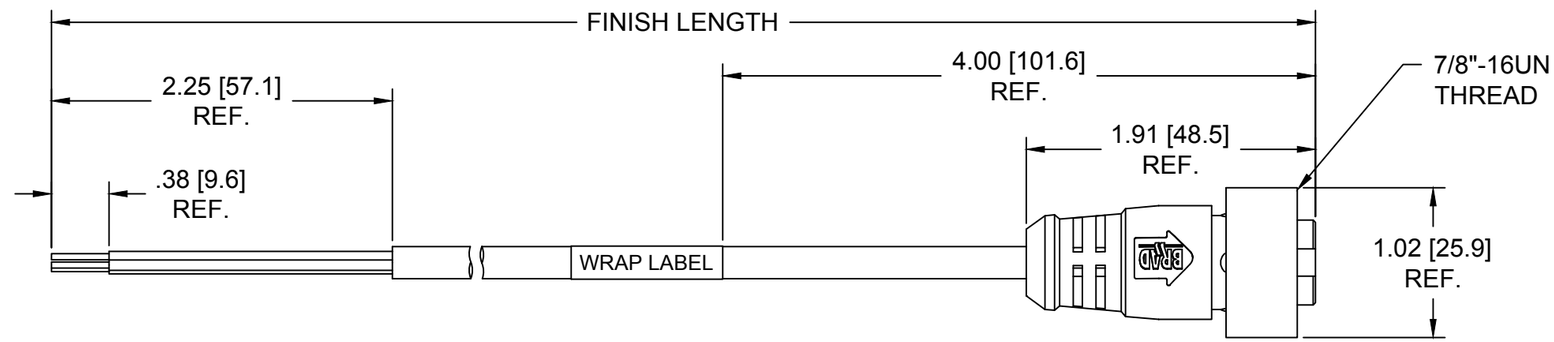

10X000A03XXXXX

POLES
2
3
4
5

LENGTH
M010 - 1 METER
M100 - 10 METER
F060 - 6 FEET
F600 - 60 FEET

COUPLING NUT
1 - SS STR.
2 - N-M
3 - NB
8 - SS HEX
BLANK - ZINC STR.

SPECIFICATIONS

MATERIALS:
COUPLING NUT: SEE CHART
CONTACTS: COPPER ALLOY, GOLD PLATED
INSERT: PVC, YELLOW
OVERMOLD: PVC, YELLOW
CABLE: 18AWG YELLOW PVC, 2-5 CONDUCTORS DEPENDENT ON POLE COUNT

ELECTRICAL:
CURRENT RATING: 10A (2P & 3P), 7A (4P), 5.6A (5P)
VOLTAGE: 300V

MECHANICAL:
TEMPERATURE RATING: -20°C TO 105°C
PROTECTION: IP67 (IN FULLY MATED POSITION)

REV	DESCRIPTION
A	INITIAL RELEASE EC NO: IPG2015-0104 DRWN: BARDEN 2014/07/17 CH'KD: BRUPERT 2014/07/18 APPR: JFMURPHY 2014/08/02

QUALITY SYMBOLS
▼=0
(C)=0

GENERAL TOLERANCES (UNLESS SPECIFIED)	mm	INCH
4 PLACES	±---	±---
3 PLACES	±---	±.005
2 PLACES	±0.13	±.010
1 PLACE	±0.25	±.020
ANGULAR ±1/2°		

DRAFT WHERE APPLICABLE MUST REMAIN WITHIN DIMENSIONS

DIMENSION STYLE: IN/MM
SCALE: NTS
DESIGN UNITS: INCH
THIRD ANGLE PROJECTION

DRAWN BY: BARDEN DATE: 2014/07/17
CHECKED BY: BRUPERT DATE: 2014/07/18
APPROVED BY: JFMURPHY DATE: 2014/08/02

TITLE: MINI-CHANGE ASSEMBLY 2-5P FE STRAIGHT 18AWG CABLE

molex MOLEX INCORPORATED

MATERIAL NO.: SEE CHART
DOCUMENT NO.: SD-130006-070
SHEET NO.: 1 OF 1
SIZE: B

THIS DRAWING CONTAINS INFORMATION THAT IS PROPRIETARY TO MOLEX INCORPORATED AND SHOULD NOT BE USED WITHOUT WRITTEN PERMISSION