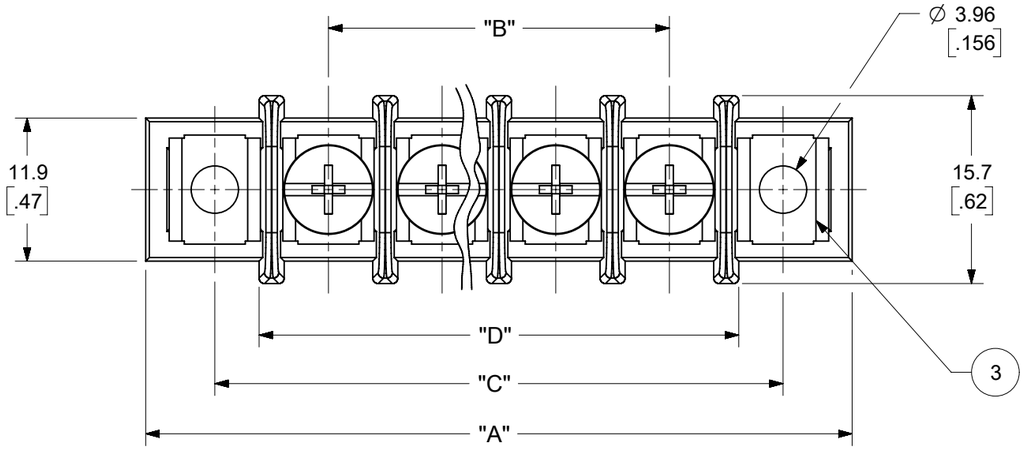

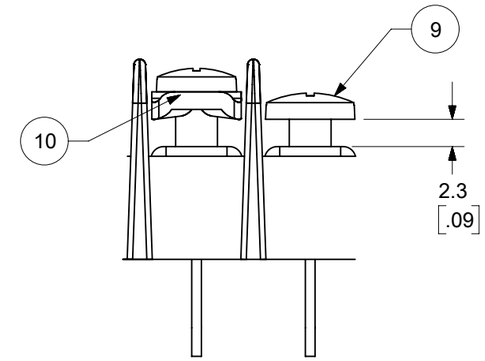

WIRE READY SPEC. (OPTION -47)
(FOR OPTIONAL SCREW -50
AND STANDARD SCREW.)

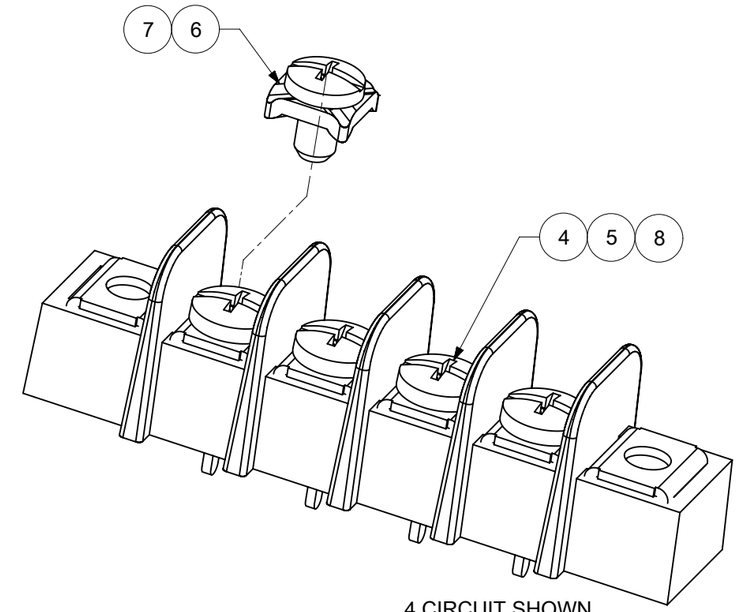

4 CIRCUIT SHOWN

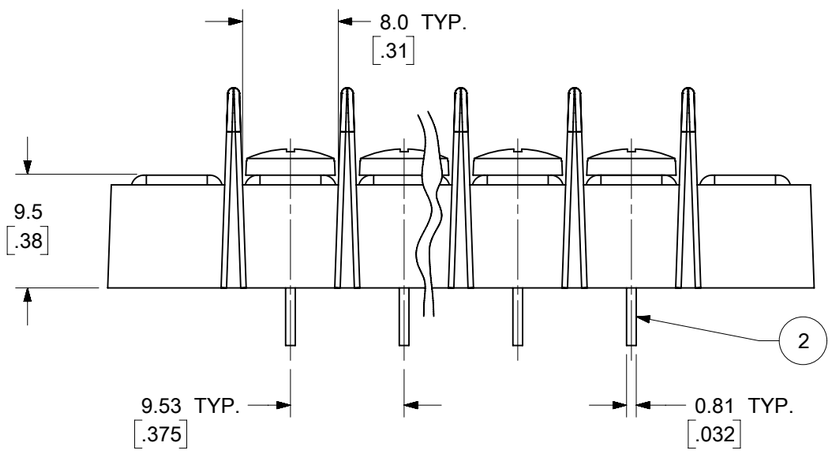

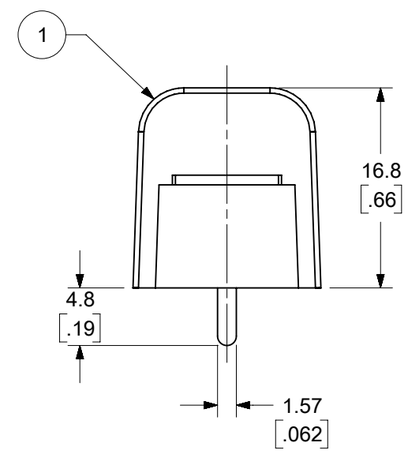

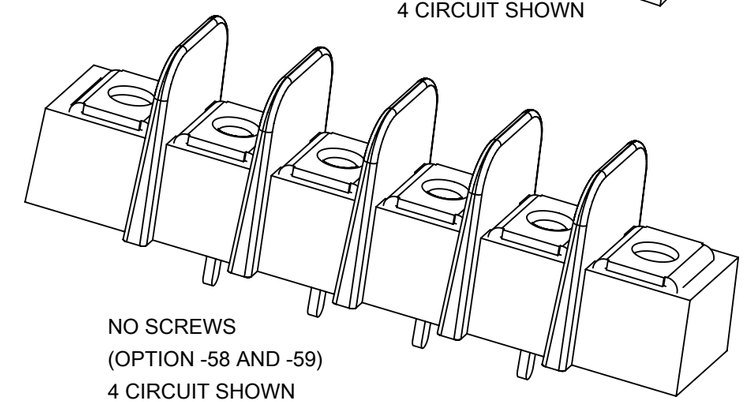

NO SCREWS
(OPTION -58 AND -59)
4 CIRCUIT SHOWN

ITEM	QTY.	DESCRIPTION	MATERIAL	FINISH
10	XX	#6-32 WRDY W/WASH SCR (OPT -47,-50)	STEEL	ZN, CLEAR CHROMATE
9	XX	#6-32 PH/SLOT WRDY SCR (OPT -47)	STEEL	ZN, CLEAR CHROMATE
8	XX	#6-32 BHD, PHIL-SLOT SST SCR (OPT -56)	STAINLESS STEEL	PASSIVATE
7	XX	#6-32 PH/SL W/WASH SCR (OPT -49,-50)	BRASS	NICKEL
6	XX	#6-32 PH/SL W/WASH SCR (OPT -50)	STEEL	ZN, CLEAR CHROMATE
5	XX	#6-32 PH/SLOTTED SCREW (OPT -49)	BRASS	NICKEL
4	XX	#6-32 PH/SLOTTED SCREW (STD)	STEEL	ZN, CLEAR CHROMATE
3	2	MOUNTING PLATE	BRASS	NICKEL
2	XX	TERMINAL, PC	BRASS	BRT. TIN/CU
1	1	INSULATOR, SINGLE ROW	PBT	BLACK

DOCUMENT STATUS	P1	RELEASE DATE	2019/12/05 22:15:21

TOLERANCES			
MM	TOL	INCH	TOL
0-6	±0.25	0-.24	±.010
>6-30	±0.40	.24-1.18	±.016
>30-120	±0.50	1.18-4.76	±.020
>120	±0.80	>4.76	±.031

NOTES:
1. MATERIAL: SEE TABLE
2. FINISHES: SEE TABLE
3. INCH DIMENSIONS ARE IN BRACKETS [XXX].
4. REFER TO SD-38120-001 FOR IMPRINTING OPTIONS 10A AND 11A.
5. REFER TO SD-38120-007 FOR IMPRINTING OPTION 12A.
6. "XX" REFERS TO THE QUANTITY OF CIRCUITS.
7. ALL COMPONENTS ARE ROHS COMPLIANT.

SYMBOLS: E = 0, E = 0, D = 0, S = 0, ▼ = 0, S = 0, ☒ = 0, ■ = 0, ▽ = 0

THIS DRAWING CONTAINS INFORMATION THAT IS PROPRIETARY TO MOLEX ELECTRONIC TECHNOLOGIES, LLC AND SHOULD NOT BE USED WITHOUT WRITTEN PERMISSION

DIMENSION UNITS: MM/INCH
SCALE: 2:1
GENERAL TOLERANCES (UNLESS SPECIFIED)

	MM	INCH
4 PLACES	± ---	± ---
3 PLACES	± ---	± SEE CHART
2 PLACES	± SEE CHART	± SEE CHART
1 PLACE	± SEE CHART	± ---
0 PLACES	± ---	± ---
ANGULAR TOL	± ---	

DRAFT WHERE APPLICABLE MUST REMAIN WITHIN DIMENSIONS

CURRENT REV DESC: ADDED PNS 387290485 & 387291667

EC NO: 627921
DRWN: ABENJAMINLW 2019/11/18
CHK'D: DACHAMMER 2019/12/04
APPR: JFMURPHY 2019/12/05

INITIAL REVISION:
DRWN: CLYORK 2006/10/19
APPR: JMACNEIL 2006/10/20

THIRD ANGLE PROJECTION | DRAWING: B-SIZE | SERIES: 38720

molex

9.53MM [.375"] SR BTS,
PC ASSY

PRODUCT CUSTOMER DRAWING

DOCUMENT NUMBER	DOC TYPE	DOC PART	REVISION
SD-38720-001	PSD	001	E

MATERIAL NUMBER	CUSTOMER	SHEET NUMBER
SEE SHEET-2	GENERAL MARKET	1 OF 2

FORMAT: Eng-lega-master-tb-prod-B
REVISION: D
DATE: 2018/01/18

NUMBER OF CIRCUITS "XX"	MATERIAL NO. (OPT 12A)	MATERIAL NO. (OPT 11A)	MATERIAL NO. (OPT 10A)	MATERIAL NO. (OPT -59)	MATERIAL NO. (OPT -58)	MATERIAL NO. (OPT -56)	MATERIAL NO. (OPT -50)	MATERIAL NO. (OPT -49,-50)	MATERIAL NO. (OPT -49)	MATERIAL NO. (OPT -49,-59)	MATERIAL NO. (OPT -47,-50)	MATERIAL NO. (STD)	NUMBER OF CIRCUITS "XX"
01						387290659						387206201	01
02			387291039		387290750	387290791	387207402	387291381	387206802			387206202	02
03	387290872	387290025	387290014			387290117	387207403		387206803		387208603	387206203	03
04			387290940	387290945		387290839	387207404	387291159	387206804			387206204	04
05	387290256		387290346			387291253	387207405	387291382	387206805			387206205	05
06				387290400	387290386	387290980	387207406	387291383	387206806			387206206	06
07			387290423	387290407	387290435	387290440	387207407		387206807			387206207	07
08	387290497				387290508	387290532	387207408		387206808	387290485		387206208	08
09			387290548		387290560		387207409		387206809			387206209	09
10			387291011	387290598	387290598	387291663	387207410		387206810			387206210	10
11						387291252	387207411					387206211	11
12			387290720			387290735	387207412		387206812	387291667		387206212	12
13					387290809		387207413					387206213	13
14					387290004		387207414		387206814			387206214	14
15												387206215	15
16												387206216	16
17												387206217	17
18												387206218	18
19												387206219	19
20												387206220	20
21												387206221	21
22												387206222	22
23												387206223	23
24												387206224	24
25												387206225	25
26												387206226	26

NUMBER OF CIRCUITS "XX"	DIM. "A"		DIM. "B"		DIM. "C"		DIM. "D"	
01	30.7	[1.21]	--	--	19.1	[.75]	11.6	[.46]
02	40.1	[1.58]	9.53	[.375]	28.6	[1.13]	21.1	[.83]
03	49.7	[1.96]	19.05	[.750]	38.1	[1.50]	30.6	[1.21]
04	59.2	[2.33]	28.58	[1.125]	47.6	[1.88]	40.1	[1.58]
05	68.7	[2.71]	38.10	[1.500]	57.2	[2.25]	49.7	[1.96]
06	78.2	[3.08]	47.63	[1.875]	66.7	[2.63]	59.2	[2.33]
07	87.8	[3.46]	57.15	[2.250]	76.2	[3.00]	68.7	[2.71]
08	97.3	[3.83]	66.68	[2.625]	85.7	[3.38]	78.2	[3.08]
09	106.8	[4.21]	76.20	[3.000]	95.3	[3.75]	87.8	[3.46]
10	116.3	[4.58]	85.73	[3.375]	104.8	[4.13]	97.3	[3.83]
11	125.9	[4.96]	95.25	[3.750]	114.3	[4.50]	106.8	[4.21]
12	135.4	[5.33]	104.78	[4.125]	123.8	[4.88]	116.3	[4.58]
13	144.9	[5.71]	114.30	[4.500]	133.4	[5.25]	125.9	[4.96]
14	154.4	[6.08]	123.83	[4.875]	142.9	[5.63]	135.4	[5.33]
15	164.0	[6.46]	133.35	[5.250]	152.4	[6.00]	144.9	[5.71]
16	173.5	[6.83]	142.88	[5.625]	161.9	[6.38]	154.4	[6.08]
17	183.0	[7.21]	152.40	[6.000]	171.5	[6.75]	164.0	[6.46]
18	192.5	[7.58]	161.93	[6.375]	181.0	[7.13]	173.5	[6.83]
19	202.1	[7.96]	171.45	[6.750]	190.5	[7.50]	183.0	[7.21]
20	211.6	[8.33]	180.98	[7.125]	200.0	[7.88]	192.5	[7.58]
21	221.1	[8.71]	190.50	[7.500]	209.6	[8.25]	202.1	[7.96]
22	230.6	[9.08]	200.03	[7.875]	219.1	[8.63]	211.6	[8.33]
23	240.2	[9.46]	209.55	[8.250]	228.6	[9.00]	221.1	[8.71]
24	249.7	[9.83]	219.08	[8.625]	238.1	[9.38]	230.6	[9.08]
25	259.2	[10.21]	228.60	[9.000]	247.7	[9.75]	240.2	[9.46]
26	268.7	[10.58]	238.13	[9.375]	257.2	[10.13]	249.7	[9.83]

TOLERANCES			
MM	TOL	INCH	TOL
0-6	±0.25	0-.24	±.010
>6-30	±0.40	.24-1.18	±.016
>30-120	±0.50	1.18-4.76	±.020
>120	±0.80	>4.76	±.031

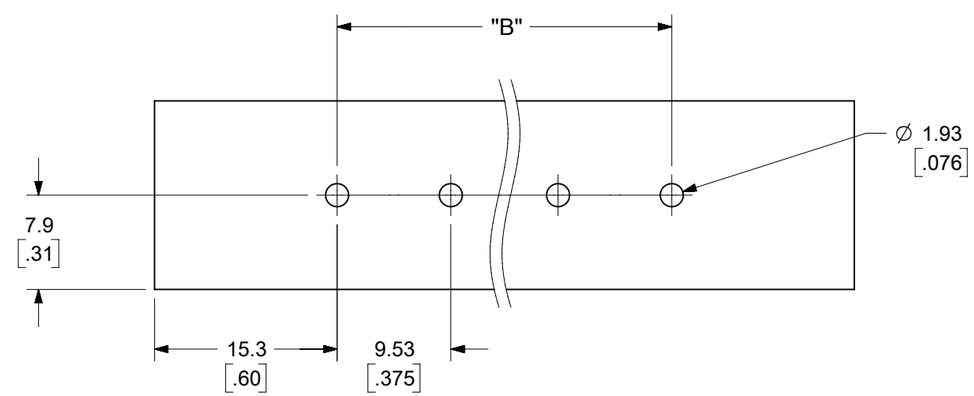

PTH PATTERN

SYMBOLS	
E = 0	
E = 0	
E = 0	
E = 0	
▼ = 0	
E = 0	
☒ = 0	
■ = 0	
E = 0	

THIS DRAWING CONTAINS INFORMATION THAT IS PROPRIETARY TO MOLEX ELECTRONIC TECHNOLOGIES, LLC AND SHOULD NOT BE USED WITHOUT WRITTEN PERMISSION

DIMENSION UNITS: MM/INCH
SCALE: 2:1

GENERAL TOLERANCES (UNLESS SPECIFIED)

	MM	INCH
4 PLACES	± ---	± ---
3 PLACES	± ---	± SEE CHART
2 PLACES	± SEE CHART	± SEE CHART
1 PLACE	± SEE CHART	± ---
0 PLACES	± ---	± ---
ANGULAR TOL	± ---	

DRAFT WHERE APPLICABLE MUST REMAIN WITHIN DIMENSIONS

CURRENT REV DESC: ADDED PNS 387290485 & 387291667

EC NO: 627921
DRWN: ABENJAMINLW 2019/11/18
CHK'D: DACHAMMER 2019/12/04
APPR: JFMURPHY 2019/12/05

INITIAL REVISION:
DRWN: CLYORK 2006/10/19
APPR: JMACNEIL 2006/10/20

THIRD ANGLE PROJECTION | DRAWING: B-SIZE | SERIES: 38720

molex

9.53MM [.375"] SR BTS, PC ASSY

PRODUCT CUSTOMER DRAWING

DOCUMENT NUMBER	DOC TYPE	DOC PART	REVISION
SD-38720-001	PSD	001	E

MATERIAL NUMBER	CUSTOMER	SHEET NUMBER
SEE CHART	GENERAL MARKET	2 OF 2

DOCUMENT STATUS	P1	RELEASE DATE	2019/12/05 22:15:21

FORMAT: Eng-legal-portrait-prod-B
REVISION: D
DATE: 2018/01/18

NUMBER OF CIRCUITS "XX"	MATERIAL NO. (OPT 12A)	MATERIAL NO. (OPT 11A)	MATERIAL NO. (OPT 10A)	MATERIAL NO. (OPT -59)	MATERIAL NO. (OPT -58)	MATERIAL NO. (OPT -56)	MATERIAL NO. (OPT -50)	MATERIAL NO. (OPT -49,-50)	MATERIAL NO. (OPT -49)	MATERIAL NO. (OPT -47,-50)	MATERIAL NO. (STD)
01						38729-0659					38720-6201
02			38729-1039		38729-0750	38729-0791	38720-7402	38729-1381	38720-6802		38720-6202
03	38729-0872	38729-0025	38729-0014			38729-0117	38720-7403		38720-6803	38720-8603	38720-6203
04			38729-0940	38729-0945		38729-0839	38720-7404	38729-1159	38720-6804		38720-6204
05	38729-0256		38729-0346			38729-1253	38720-7405	38729-1382	38720-6805		38720-6205
06				38729-0400	38729-0386	38729-0980	38720-7406	38729-1383	38720-6806		38720-6206
07			38729-0423	38729-0407	38729-0435	38729-0440	38720-7407		38720-6807		38720-6207
08	38729-0497				38729-0508	38729-0532	38720-7408		38720-6808		38720-6208
09			38729-0548		38729-0560		38720-7409		38720-6809		38720-6209
10			38729-1011	38729-0598	38729-0598	38729-1663 (D)	38720-7410		38720-6810		38720-6210
11						38729-1252	38720-7411				38720-6211
12			38729-0720			38729-0735	38720-7412		38720-6812		38720-6212
13					38729-0809		38720-7413				38720-6213
14					38729-0004		38720-7414		38720-6814		38720-6214
15											38720-6215
16											38720-6216
17											38720-6217
18											38720-6218
19											38720-6219
20											38720-6220
21											38720-6221
22											38720-6222
23											38720-6223
24											38720-6224
25											38720-6225
26											38720-6226

NUMBER OF CIRCUITS "XX"	DIM. "A"		DIM. "B"		DIM. "C"		DIM. "D"	
01	30.7	[1.21]	-	-	19.1	[.75]	11.6	[.46]
02	40.1	[1.58]	9.53	[.375]	28.6	[1.13]	21.1	[.83]
03	49.7	[1.96]	19.05	[.750]	38.1	[1.50]	30.6	[1.21]
04	59.2	[2.33]	28.58	[1.125]	47.6	[1.88]	40.1	[1.58]
05	68.7	[2.71]	38.10	[1.500]	57.2	[2.25]	49.7	[1.96]
06	78.2	[3.08]	47.63	[1.875]	66.7	[2.63]	59.2	[2.33]
07	87.8	[3.46]	57.15	[2.250]	76.2	[3.00]	68.7	[2.71]
08	97.3	[3.83]	66.68	[2.625]	85.7	[3.38]	78.2	[3.08]
09	106.8	[4.21]	76.20	[3.000]	95.3	[3.75]	87.8	[3.46]
10	116.3	[4.58]	85.73	[3.375]	104.8	[4.13]	97.3	[3.83]
11	125.9	[4.96]	95.25	[3.750]	114.3	[4.50]	106.8	[4.21]
12	135.4	[5.33]	104.78	[4.125]	123.8	[4.88]	116.3	[4.58]
13	144.9	[5.71]	114.30	[4.500]	133.4	[5.25]	125.9	[4.96]
14	154.4	[6.08]	123.83	[4.875]	142.9	[5.63]	135.4	[5.33]
15	164.0	[6.46]	133.35	[5.250]	152.4	[6.00]	144.9	[5.71]
16	173.5	[6.83]	142.88	[5.625]	161.9	[6.38]	154.4	[6.08]
17	183.0	[7.21]	152.40	[6.000]	171.5	[6.75]	164.0	[6.46]
18	192.5	[7.58]	161.93	[6.375]	181.0	[7.13]	173.5	[7.21]
19	202.1	[7.96]	171.45	[6.750]	190.5	[7.50]	192.5	[7.58]
20	211.6	[8.33]	180.98	[7.125]	200.0	[7.88]	202.1	[7.96]
21	221.1	[8.71]	190.50	[7.500]	209.6	[8.25]	211.6	[8.33]
22	230.6	[9.08]	200.03	[7.875]	219.1	[8.63]	221.1	[8.71]
23	240.2	[9.46]	209.55	[8.250]	228.6	[9.00]	230.6	[9.08]
24	249.7	[9.83]	219.08	[8.625]	238.1	[9.38]	230.6	[9.08]
25	259.2	[10.21]	228.60	[9.000]	247.7	[9.75]	240.2	[9.46]
26	268.7	[10.58]	238.13	[9.375]	257.2	[10.13]	249.7	[9.83]

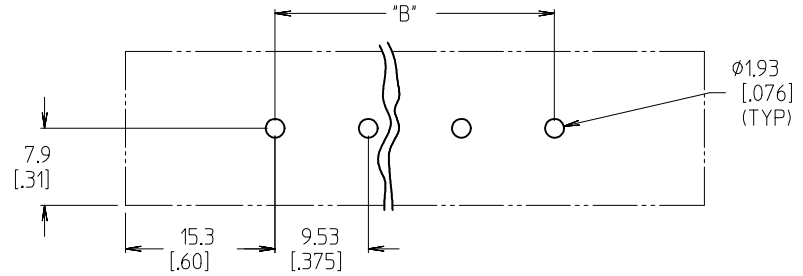

PTH PATTERN

ADD 387291663 (10P)
EC NO: IPG2015-0783
DRWN:RSTONE 2014/10/27
CHKD:B RUPERT 10/29/2014
APPR:BWOODMAN 2014/11/02
DESCRIPTION
REV D

QUALITY SYMBOLS
▼=0
(C)=0

GENERAL TOLERANCES (UNLESS SPECIFIED)

	mm	INCH
4 PLACES	± ---	± ---
3 PLACES	± ---	± .005
2 PLACES	± 0.13	± .01
1 PLACE	± 0.3	± ---
ANGULAR ± 2 °		

DRAFT WHERE APPLICABLE MUST REMAIN WITHIN DIMENSIONS

DIMENSION STYLE: MM/IN
SCALE: 2:1
DESIGN UNITS: INCH
THIRD ANGLE PROJECTION

DRAWN BY: W. HOWARD DATE: 2003/10/16
CHECKED BY: R. KEMP DATE: 2003/10/16
APPROVED BY: P. WALTZ DATE: 2003/10/16

TITLE: 9.53MM [.375"] SR BTS, PC ASSY

molex MOLEX INCORPORATED

MATERIAL NO.: SEE CHART
DOCUMENT NO.: SD-38720-001
SHEET NO.: 2 OF 2
SIZE: B

THIS DRAWING CONTAINS INFORMATION THAT IS PROPRIETARY TO MOLEX INCORPORATED AND SHOULD NOT BE USED WITHOUT WRITTEN PERMISSION