MATERIAL NO.	ENGINEERING NO.	FINISHED LENGTH
1300480205	E16A06002M010	3FT 3.37IN (1M)
1300480022	E16A06002M450	147 FT 7.7 IN (45M)
1300480026	E16A06002M900	295FT 3.30 (90M)

A2

NOTES:
1. MATERIAL: AS NOTED
2. FINISH: AS NOTED
3. ELECTRICAL SPECIFICATIONS
   VOLTAGE RATING: 125V
   CURRENT RATING: 1.5A
4. TEMP RANGE: -25°C TO +75°C
5. PROTECTION: IP67 (WHEN MATED)
6. UL FILE: E200650 A2
7. ALL DIMS ARE FOR REFERENCE UNLESS TOLERANCED OR NOTED OTHERWISE

WIRING DIAGRAM

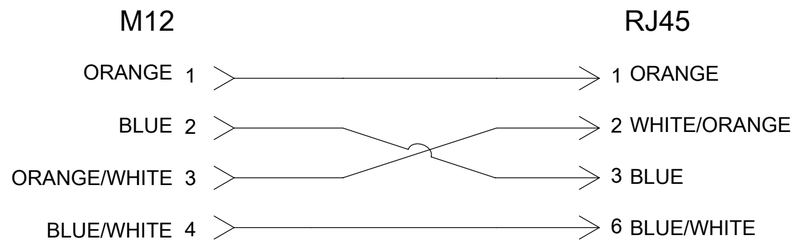

A2 PART NO. MATRIX

E16A06002M100

FINISHED LENGTH
M005= 0.5 METER
M010= 1 METER
M150= 15 METER

A2

CABLE LENGTH TOLERANCES
<.3M [1FT]: +19mm-0 [+.75in-0]
.3 - .9M [1 - 3FT]: +44.5mm-0 [+1.75in-0]
.9 - 1.8M [3 - 6FT]: +55.6mm-0 [+2.19in-0]
1.8 - 3.7M [6 - 12FT: +88.9mm-0 [+3.50in-0]
3.7 - 7.3M [12 - 24FT]: +165.1mm-0 [+6.50in-0]
7.3-14.6M [24 - 48FT]: +317.5mm-0 [+12.50in-0]
14.6 - 30.5M [48-100FT]: +622.3mm-0 [+24.50in-0]
OVER 30M [100FT] +2% OF FINISHED LENGTH

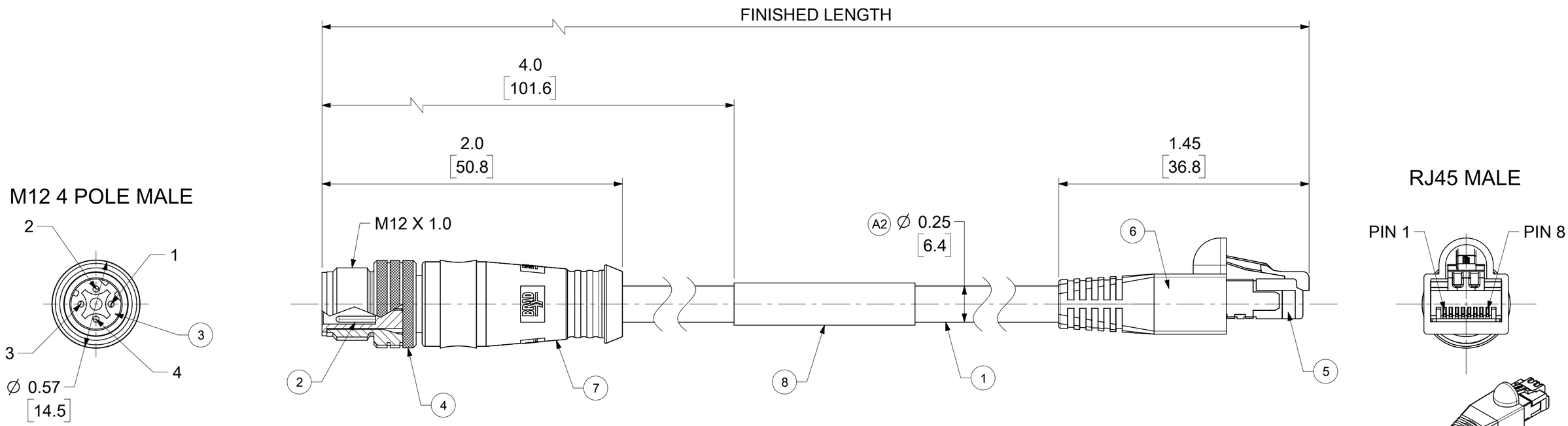

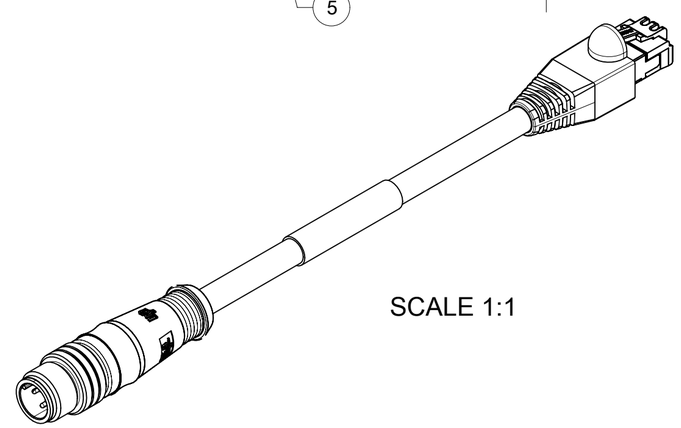

SCALE 1:1

ITEM	DESCRIPTION	MATERIAL	FINISH
8	LABEL	VINYL	BLACK/WHITE
7	OVERMOLD	TPU	BLACK
6	RJ45 BOOT, HOODED	PVC	BLACK
5	RJ45 PLUG	POLYCARBONATE	TRANSPARENT
4	COUPLING NUT M12 MALE	BRASS	NICKEL
3	INSERT D-CODE 4 POLE MALE	PUR	BLACK
2	CONTACT PIN	COPPER ALLOY	GOLD PLATED
1	CABLE, ETHERNET, 24-4	PVC JACKET	TEAL

DOCUMENT STATUS	P1	RELEASE DATE	2020/11/18 23:03:28

THIS DRAWING CONTAINS INFORMATION THAT IS PROPRIETARY TO MOLEX ELECTRONIC TECHNOLOGIES, LLC AND SHOULD NOT BE USED WITHOUT WRITTEN PERMISSION

FUNCTIONAL SYMBOLS
FA = 0
FC = 0
FP = 0
DIVISIONAL SYMBOLS

DIMENSION UNITS: INCH/MM
SCALE: 2:1

GENERAL TOLERANCES (UNLESS SPECIFIED)

	MM	INCH
4 PLACES	±	±
3 PLACES	±	±
2 PLACES	±	±
1 PLACE	±	±
0 PLACES	±	±
ANGULAR TOL	± °	

DRAFT WHERE APPLICABLE MUST REMAIN WITHIN DIMENSIONS

CURRENT REV DESC: ADDED UL, MODIFIED MATERIAL TABLE, TOLERANCE CHART, PART NO. MATRIX & CABLE DIA ADDED.

EC NO: 648668
DRWN: VBASUTHKARP 2020/09/24
CHK'D: RSTONE 2020/11/11
APPR: BWOODMAN 2020/11/18

INITIAL REVISION:
DRWN: HWALCZAK 2012/04/03
APPR: MDYSZEWSKA 2012/04/16

THIRD ANGLE PROJECTION | DRAWING: C-SIZE | SERIES: 130048

molex

MICRO-CHANGE CORDSET
M12 D-CODE 4 POLE-RJ45, MALE, STRAIGHT, 24-4 AWG CAT-5E

PRODUCT CUSTOMER DRAWING

DOCUMENT NUMBER	DOC TYPE	DOC PART	REVISION
SD-130048-004	PSD	001	A2

MATERIAL NUMBER	CUSTOMER	SHEET NUMBER
SEE TABLE	GENERAL MARKET	1 OF 1

FORMAT: Eng-lega-master-tb-prod-C
REVISION: B
DATE: 2020/11/4