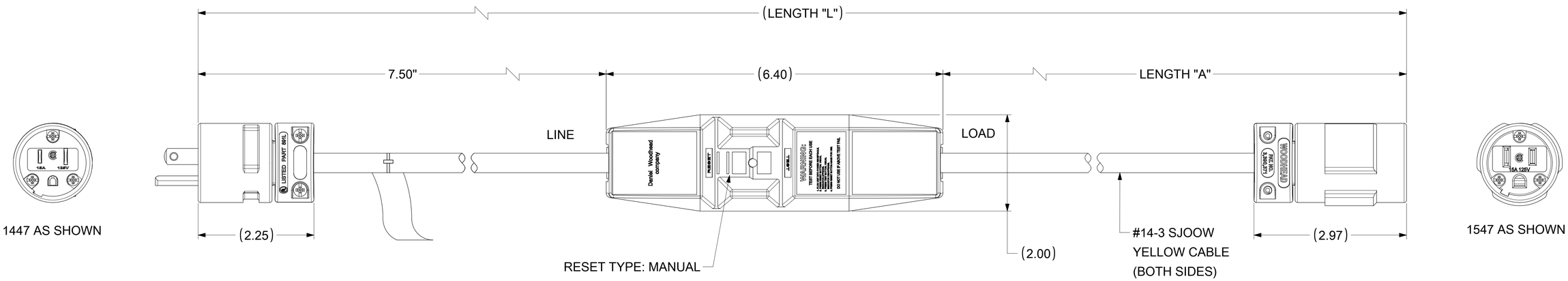

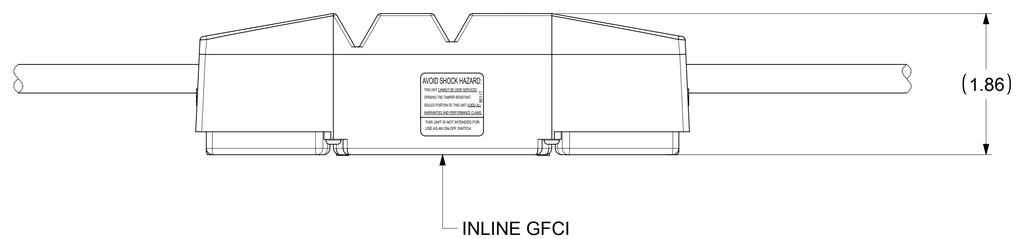

MATERIAL NO.	ENGINEERING NO.	LENGTH "A"	LENGTH "L"	PLUG	CONNECTOR
1301530042	15051-1	9.50 IN.	1 FT. 11.4 IN	1447	1547
1301530051	15051-6	4 FT. 10.5 IN.	6 FT. 0.4 IN.	1447	1547
1301530045	15051-25	23 FT. 10.5 IN.	25 FT. 0.4 IN.	1447	1547
1301530048	15051-50	48 FT. 10.5 IN.	50 FT. 0.4 IN.	1447	1547

TECHNICAL

LISTED:	cULus
RATED SUPPLY VOLTAGE:	120VAC
RATED CURRENT:	15A
RESET TYPE:	MANUAL
OPERATING FREQUENCY:	60 Hz
TYPE:	CLASS A
GROUND TRIP CURRENT:	4-6 mA
OVERLOAD CURRENT:	90A
INSULATION VOLTAGE:	1,500 VRMS - 1 MINUTE
ENDURANCE OPERATIONS:	3000 OPERATIONS

THIS DRAWING CONTAINS INFORMATION THAT IS PROPRIETARY TO MOLEX ELECTRONIC TECHNOLOGIES, LLC AND SHOULD NOT BE USED WITHOUT WRITTEN PERMISSION

FUNCTIONAL SYMBOLS: FA = 0, FC = 0, FP = 0

DIVISIONAL SYMBOLS

DIMENSION UNITS	SCALE
INCH	NTS

GENERAL TOLERANCES (UNLESS SPECIFIED)

ANGULAR TOL	± °
4 PLACES	±
3 PLACES	±
2 PLACES	±
1 PLACE	±
0 PLACES	±

DRAFT WHERE APPLICABLE MUST REMAIN WITHIN DIMENSIONS

CURRENT REV DESC: NEW SALES DRAWING CREATED

EC NO: 693004
DRWN: PPURSUTANDEL 2021/09/23
CHK'D: DNGUYEN62 2022/01/26
APPR: HKNEELAND 2022/02/02

INITIAL REVISION:
DRWN: PPURSUTANDEL 2021/09/23
APPR: HKNEELAND 2022/02/02

molex

GFCI IN-LINE 15A WITH SAFEWAY PLUG AND CONNECTOR

PRODUCT CUSTOMER DRAWING

DOCUMENT NUMBER	DOC TYPE	DOC PART	REVISION
1301530045	PSD	000	A

THIRD ANGLE PROJECTION	DRAWING	SERIES	MATERIAL NUMBER	CUSTOMER	SHEET NUMBER
	D-SIZE	130153	SEE TABLE	GENERAL MARKET	1 OF 1

DOCUMENT STATUS	P1	RELEASE DATE	2022/02/02 21:42:46