CATALOG NUMBER	MATERIAL NUMBER	CABLE RANGE	LENGTH "M"	LENGTH "B"	APPROXIMATE BREAK STRENGTH (LBS/N)	UL LISTED	CSA APPROVED
36550	1300960059	.30-.43 / 7.6-10.9	4.50±0.50 / 114.3±12.5	1.875±0.25 / 47.63±6.35	180 / 801	NO	YES
36551	1300960060	.40-.56 / 10.2-14.2	5.00±0.50 / 127.0±12.5	2.094±0.25 / 53.19±6.35	180 / 801		
36552	1300960061	.52-.73 / 13.2-18.5	6.50±0.50 / 165.1±12.5	2.094±0.25 / 53.19±6.35	450 / 2002		
36553	1300960062	.70-.85 / 17.8-21.6	8.50±1.00 / 215.9±25.4	2.345±0.50 / 59.56±12.70	600 / 2669		
36554	1300960063	.82-1.00 / 20.8-25.4	8.50±1.00 / 215.9±25.4	2.345±0.50 / 59.56±12.70	600 / 2669		
36555	1300960064	.94-1.25 / 23.9-31.8	11.00±1.00 / 279.4±25.4	2.345±0.50 / 59.56±12.70	600 / 2669		

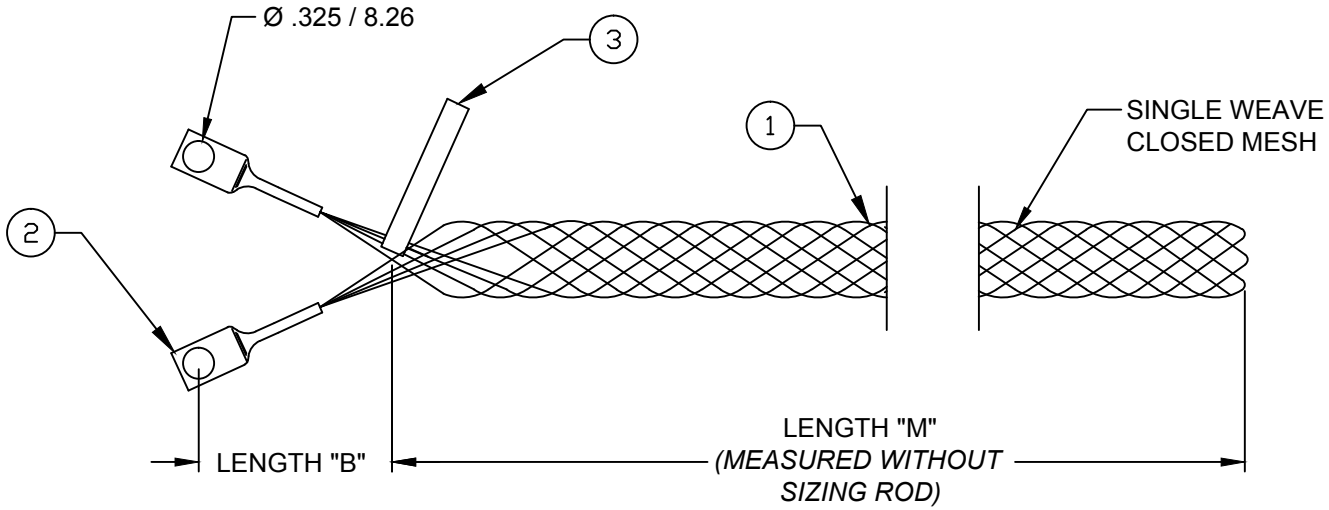

ITEM	DESCRIPTION	MATERIAL
1	WIRE MESH	GALVANIZED STEEL
2	TERMINAL LUG	ALUMINUM
3	LABEL	MYLAR

RELEASE SALES DWG
EC NO: IPG2015-1537
DRWN: HRUIZ01 2015/03/04
CHKD: HKNEELAN 2015/03/04
APPR: JFMURPHY 2015/06/12
DESCRIPTION
A
REV

QUALITY SYMBOLS
▼=0
(C)=0

GENERAL TOLERANCES (UNLESS SPECIFIED)

	mm	INCH
4 PLACES	±---	±---
3 PLACES	±---	±.005
2 PLACES	±.13	±.010
1 PLACE	±.25	±.020

ANGULAR ±1/2°

DRAFT WHERE APPLICABLE MUST REMAIN WITHIN DIMENSIONS

DIMENSION STYLE: INCH/MM
SCALE: NTS
DESIGN UNITS: INCH
THIRD ANGLE PROJECTION

DRAWN BY: HRUIZ01 DATE: 2015/03/04
CHECKED BY: HKNEELAN DATE: 2015/03/04
APPROVED BY: JFMURPHY DATE: 2015/06/12

TITLE
STRAIN RELIEF
WIRING DEVICE I-GRIP
GALVANIZED STEEL MESH

molex MOLEX INCORPORATED

MATERIAL NO.: SEE TABLE
DOCUMENT NO.: SD-130096-106
SHEET NO.: 1 OF 1
SIZE: A

THIS DRAWING CONTAINS INFORMATION THAT IS PROPRIETARY TO MOLEX INCORPORATED AND SHOULD NOT BE USED WITHOUT WRITTEN PERMISSION