| PART NO. | ENGINEERING NO. | FINISHED LENGTH |
|---|---|---|
| 1300130493 | 1R5006A20A120 | 12 IN (0.30M) |
| 1300130500 | 1R5006A20F030 | 3 FT (0.90M) |
| 1300131166 | 1R5006A20M030 | 3M (9 FT, 10 IN) |

CABLE LENGTH TOLERANCES
<.3M [1FT]: +19mm-0 [ +.75in-0]
.3 - .9M [1 - 3FT]: +44.5mm-0 [+1.75in-0]
.9 - 1.8M [3 - 6FT]: +55.6mm-0 [+2.19in-0]
1.8 - 3.7M [6 - 12FT: +88.9mm-0 [+3.50in-0]
3.7 - 7.3M [12 - 24FT]: +165.1mm-0 [+6.50in-0]
7.3-14.6M [24 - 48FT]: +317.5mm-0 [+12.50in-0]
14.6 - 30.5M [48-100FT]: +622.3mm-0 [+24.50in-0]
OVER 30M [100FT] +2% OF FINISHED LENGTH

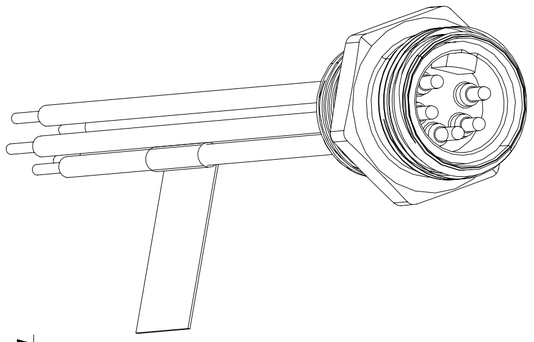

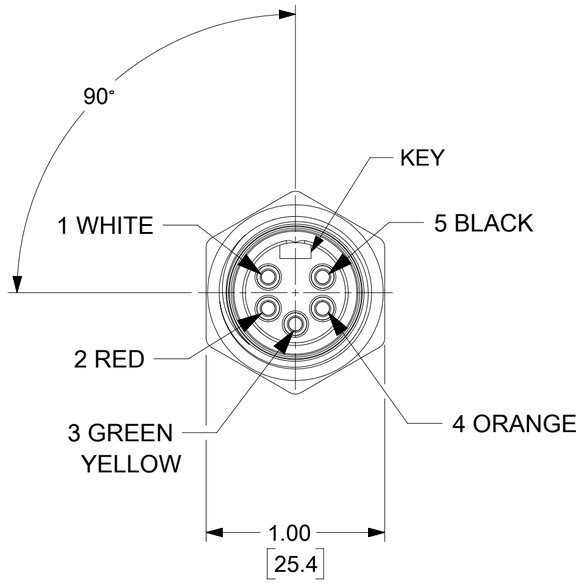


MALE FACE VIEW

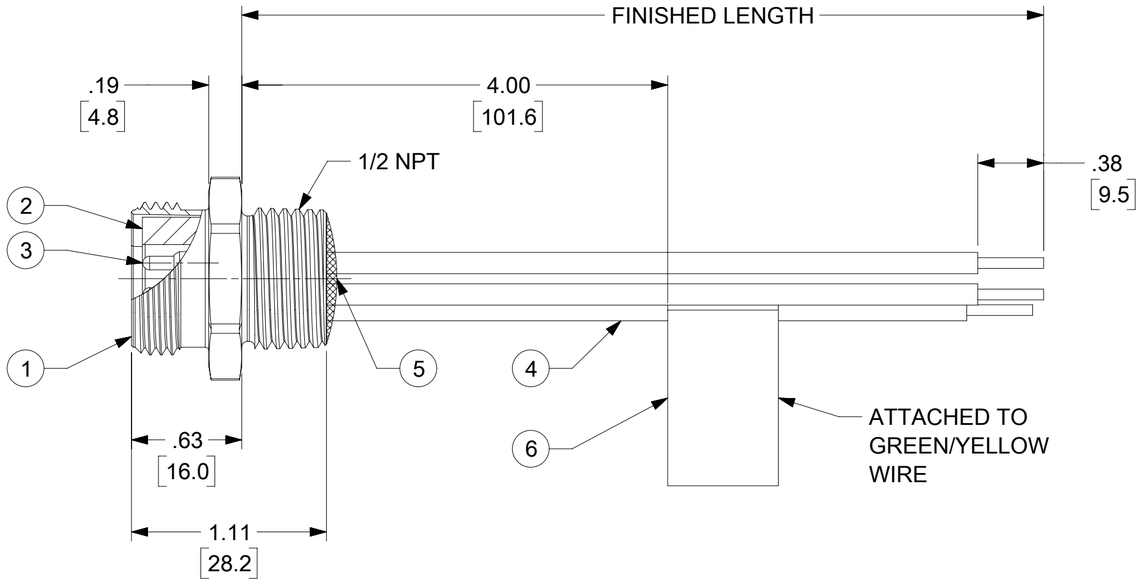


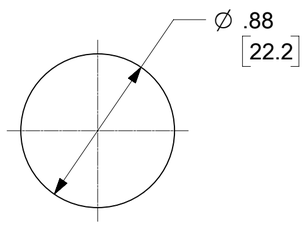


REF. KNOCKOUT HOLE

NOTES:
1. MATERIAL: AS NOTED
2. FINISH: AS NOTED
3. ELECTRICAL:
   VOLTAGE: 400V PER IEC60664
   600V PER UL2238
   CURRENT: 8A
4. TEMP RATING: -20°C TO +105°C
5. PROTECTION: IP67 (WHEN MATED)
6. COUPLING THREAD: 7/8-16 UN
7. UL RECOGNIZED FILE: E152210
   CSA CERTIFIED: LR6837
8. ALL DIMS ARE FOR REFERENCE UNLESS TOLERANCED OR NOTED OTHERWISE

## PART NUMBER LEGEND

1R5006A20A120

LENGTH
A060 =6 IN
A120 = 12 IN
F060 = 6.0 FT
M003 = 0.3 METERS
M010 = 1.0 METERS
M100 = 10.0 METERS

| ITEM | DESCRIPTION | MATERIAL | FINISH |
|---|---|---|---|
| 6 | FLAG LABEL | VINYL | BLACK/YELLOW |
| 5 | POTTING MATERIAL | EPOXY | |
| 4 | WIRE #16 (UL 1015) | PVC INSULATION | SEE FACE VIEW |
| 3 | CONTACT PIN | Cu ALLOY | GOLD PLATED |
| 2 | INSERT | TPE | YELLOW |
| 1 | RECEPTACLE SHELL | ZINC (DIE-CAST) | BLACK E-COAT |

| DOCUMENT STATUS | P1 | RELEASE DATE | 2021/07/12 18:53:08 |
|---|---|---|---|

THIS DRAWING CONTAINS INFORMATION THAT IS PROPRIETARY TO MOLEX ELECTRONIC TECHNOLOGIES, LLC AND SHOULD NOT BE USED WITHOUT WRITTEN PERMISSION

FUNCTIONAL SYMBOLS
FA = 0
FC = 0
FP = 0
DIVISIONAL SYMBOLS

DIMENSION UNITS: INCH/MM
SCALE: 1:1
GENERAL TOLERANCES (UNLESS SPECIFIED)

| | MM | INCH |
|---|---|---|
| 4 PLACES | ± | ± |
| 3 PLACES | ± | ± |
| 2 PLACES | ± | ± |
| 1 PLACE | ± | ± |
| 0 PLACES | ± | ± |
| ANGULAR TOL | ± ° | |

DRAFT WHERE APPLICABLE MUST REMAIN WITHIN DIMENSIONS

CURRENT REV DESC: REDRAWN TO NX FOR 5 POLE, REPLACES SD-130013-120

EC NO: 668276
DRWN: RSTONE 2021/06/24
CHK'D: MZIELINSKI 2021/07/08
APPR: BWOODMAN 2021/07/12

INITIAL REVISION:
DRWN: RSTONE 2021/06/24
APPR: BWOODMAN 2021/07/12

THIRD ANGLE PROJECTION
DRAWING: C-SIZE
SERIES: 130013

molex

MINI-CHANGE RECEPTACLE
5 POLE MALE, STRAIGHT, SINGLE KEY, 16 AWG

PRODUCT CUSTOMER DRAWING

| DOCUMENT NUMBER | DOC TYPE | DOC PART | REVISION |
|---|---|---|---|
| 1300130493 | PSD | 000 | A |

| MATERIAL NUMBER | CUSTOMER | SHEET NUMBER |
|---|---|---|
| SEE P/N LEGEND | GENERAL MARKET | 1 OF 1 |

FORMAT: Eng-legal-master-tb-prod-C
REVISION: E
DATE: 2020/01/14