A

board drillings

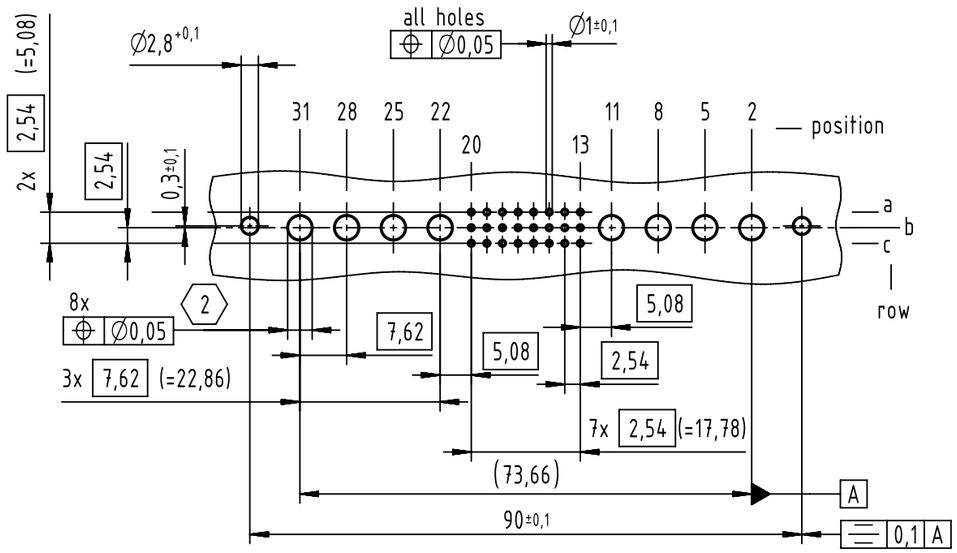

A

contact arrangement

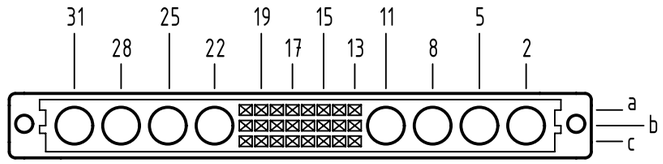

24 solder contacts

⊠ = solder contact

□ = position without contact

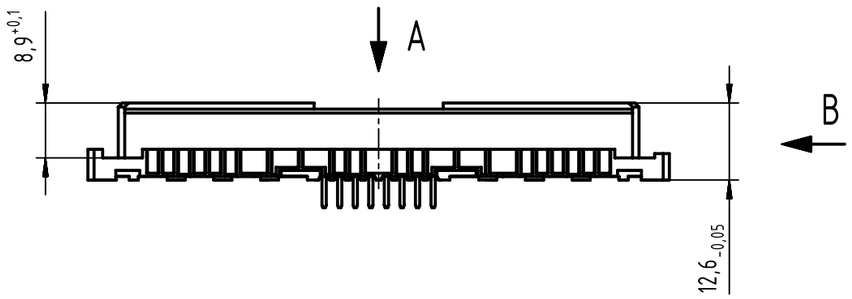

B (2:1)

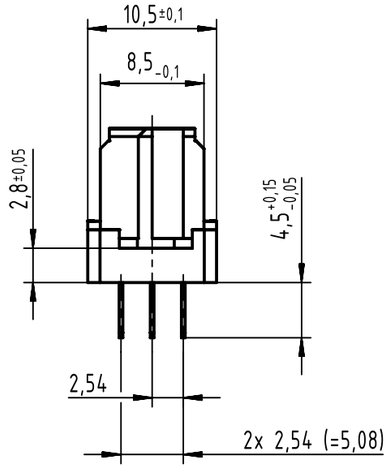

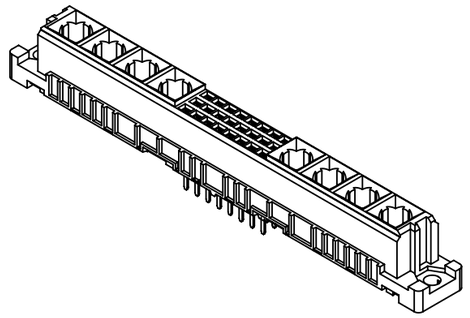

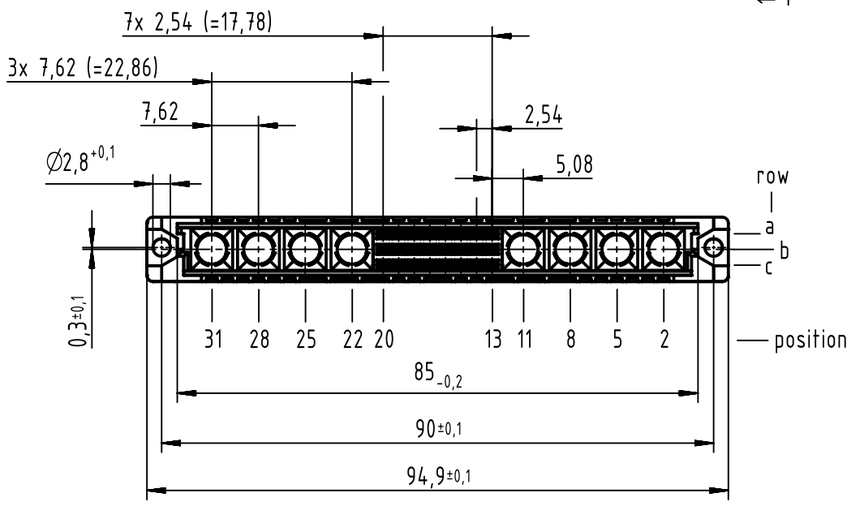

(2) hole diameter is to be co-ordinated with the respective contact

(1) further information see: DS 09032100001

09 03 224 6865	2
part no.	performance level (1)

All Dimensions in mm Original Size DIN A3	Scale 1:1	Free size tol. IEC 60603-2		Ref. Sub.	
All rights reserved Department EL PD	Created by ZWAHR	Inspected by DAHMS	Standardisation HOFFMANN	Date 2017-01-20	State Final Release
	Title DIN Signal type M24-flat female solder 4.5 24-pole				Doc-Key / ECM-Nr. 100072218/UGD/034/D 500000114090
HARTING Electronics GmbH D-32339 Espelkamp	Type TB	Number 0903224X865		Rev. D	Page 1/1

A3