MATERIAL NUMBER	OLD PART NUMBER
1300350068	DN3030-PT-1

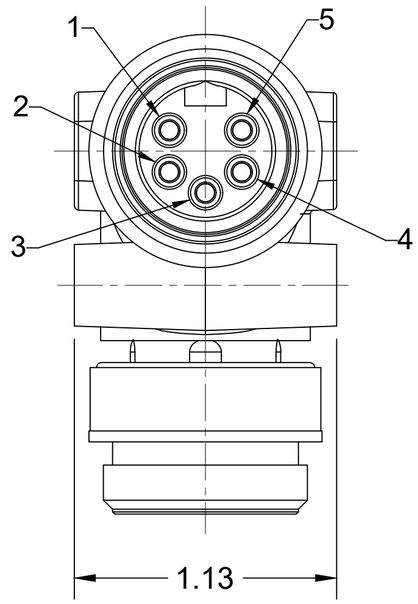

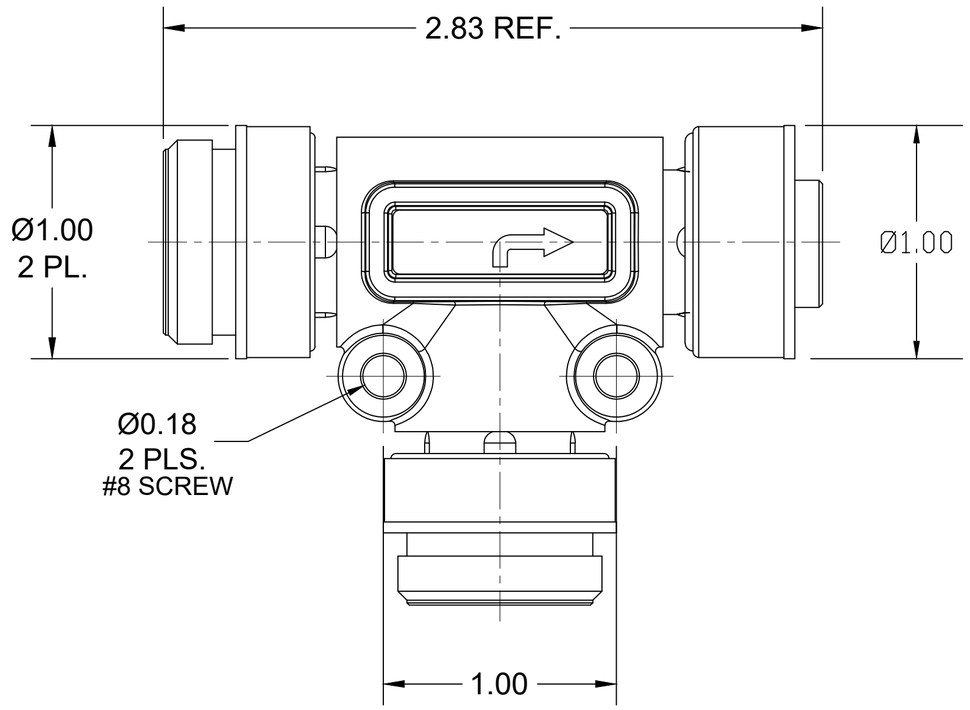

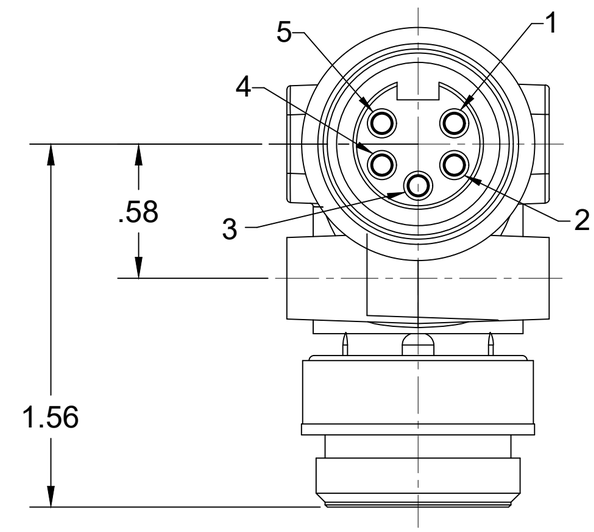

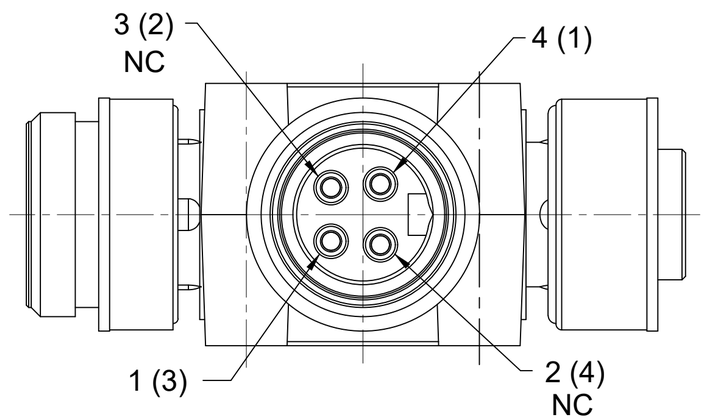

(B) CENELEC PINOUT
(SAE PINOUT)

SCHEMATIC

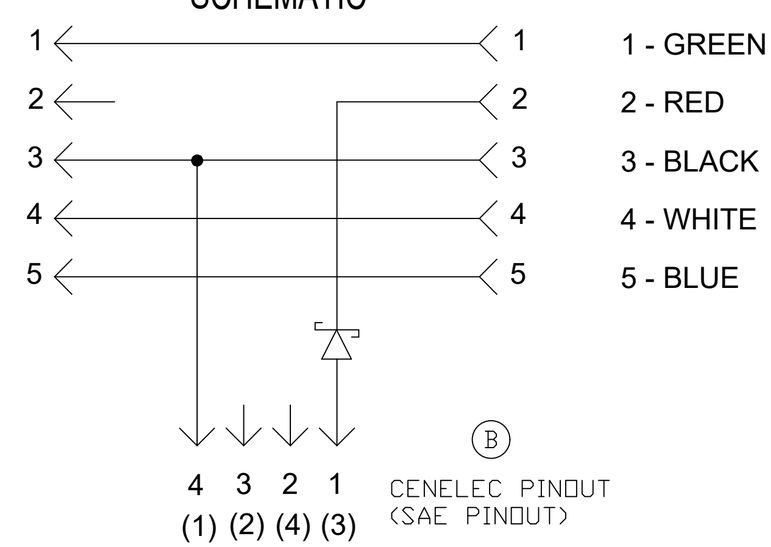

(B) CENELEC PINOUT
(SAE PINOUT)

NOTES:

1. MATERIAL: AS NOTED
2. FINISH: AS NOTED
3. ELECTRICAL:
   VOLTAGE RATING PER IEC 60664: 600V
   VOLTAGE RATING PER UL: 600V
   CURRENT: 8A
4. TEMP RATING: -20° TO +105°C
5. PROTECTION: IP67 (WHEN MATED)
6. COUPLING THREAD: 7/8-16 UN
7. CONTACT RESISTANCE: 5 MILLIOMS MAX.
   ISOLATION RESISTANCE: 1000 MEGOHMS MIN.
8. ALL DIMENSIONS ARE FOR REFERENCE
   UNLESS TOLERANCED OR NOTED OTHERWISE

ITEM	COMPONENT	MATERIAL	FINISH
1	INSERT	TPE	GRAY
2	CONTACT SOCKET	COPPER ALLOY	GOLD OVER NICKEL
3	CONTACT PIN	COPPER ALLOY	GOLD OVER NICKEL
4	COUPLING NUT	ZINC DIE CAST	BLACK E-COATED
5	OVERMOLD	TPE	GRAY

DOCUMENT STATUS	P1	RELEASE DATE	2021/04/02 20:43:18

THIS DRAWING CONTAINS INFORMATION THAT IS PROPRIETARY TO MOLEX ELECTRONIC TECHNOLOGIES, LLC AND SHOULD NOT BE USED WITHOUT WRITTEN PERMISSION

FUNCTIONAL SYMBOLS: FA=0, FC=0, FP=0
DIVISIONAL SYMBOLS

DIMENSION UNITS: INCH
SCALE: NTS

GENERAL TOLERANCES (UNLESS SPECIFIED)

	mm	INCH
4 PLACES	±----	±----
3 PLACES	±----	±0.005
2 PLACES	±0.13	±0.01
1 PLACE	±0.25	±----
0 PLACES	±----	±----
ANGULAR TOL ± 0.5 °		

DRAFT WHERE APPLICABLE MUST REMAIN WITHIN DIMENSIONS

CURRENT REV DESC: ADD CENELEC PINOUT & (SAE PINOUT)

EC NO: 659771
DRWN: RSTONE 2021/03/31
CHK'D: ALEON01 2021/04/02
APPR: BWOODMAN 2021/04/02

INITIAL REVISION:
DRWN: GGUSTAFS 2015/04/09
APPR: BWOODMAN 2015/04/17

THIRD ANGLE PROJECTION | DRAWING: C-SIZE | SERIES: 130035

molex

MINI-CHANGE DN3030-PT-1
A SIZE, 5 POLE-4 POLE TEE, 18 AWG

PRODUCT CUSTOMER DRAWING

DOCUMENT NUMBER	DOC TYPE	DOC PART	REVISION
SD-130035-017	PSD	001	B

MATERIAL NUMBER	CUSTOMER	SHEET NUMBER
SEE CHART	GENERAL MARKET	1 OF 1

FORMAT: IN-ACAD-tb-prod-C
REVISION: B
DATE: 2020/01/14