REVISIONS					
REV	ECO	DESCRIPTION	DATE	BY	APPR
A1	-	RELEASED DRAWING	Sep-7-2016	Ben	Tommy
A2	-	Updating Drawing	Sep-14-2016	Flan	Tommy

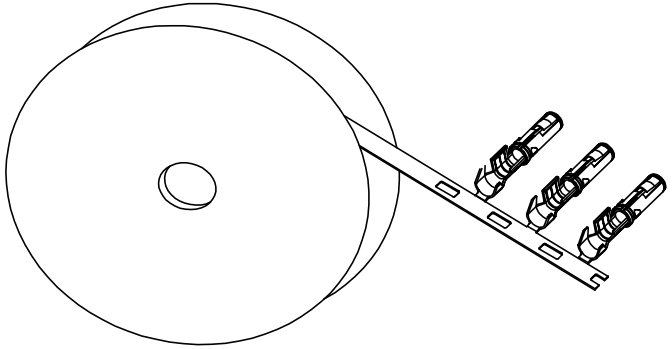

CONTACT ORIENTATION ON ROLL

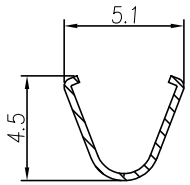

SECTION A-A

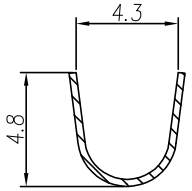

SECTION B-B

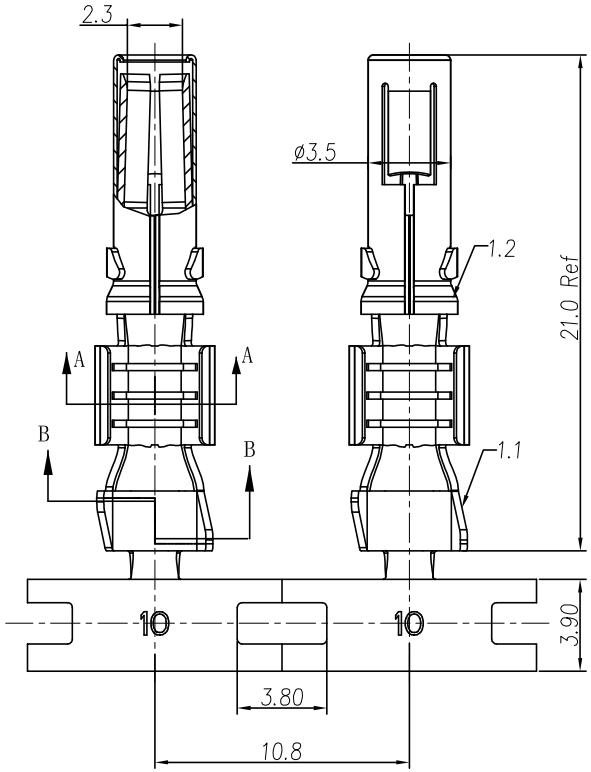

NOTES : (UNLESS OTHERWISE SPECIFIED)

1. MATERIAL :
- **1.1. CONTACT BODY : COPPER ALLOY.**
- **1.2. OUTER SPRING : STAINLESS STEEL.**

2. SPECIFICATIONS :
- **2.1 CURRENT RATING : 23A MAX.**
- **2.2 TERMINATION TYPE : CRIMPING.**
- **2.3 WIRE RANGE : 4mm2.**
- **2.4 WIRE INSULATION DIA(MAX) : ϕ4.3mm.**

3. RoHS COMPLIANT.

4. ALL DIMENSIONS ARE FOR REFERENCE USE ONLY.

P/N	CONTACT PLATING(MATING AREA)
SS12A1T-10	TIN PLATING OVER NICKEL.
SS12A1F-10	GOLD FLASH PLATING OVER NICKEL.
SS12A1G10-10	10μ"GOLD PLATING OVER NICKEL.
SS12A1G15-10	15μ"GOLD PLATING OVER NICKEL.
SS12A1G30-10	30μ"GOLD PLATING OVER NICKEL.

QUANTITY	PART NUMBER	DESCRIPTION	ITEM

MATERIALS LIST

UNLESS OTHERWISE SPECIFIED
1) All dimensions are in metric(mm).
2) Tolerances are as follows:
1 PL DEC ±0.30
2 PL DEC ±0.15
3 PL DEC ±0.08
Fractions ±1/64
Angles ±1°
3) Note reference = A

MATERIAL SPECIFICATIONS:

PROCESS SPECIFICATIONS:

NEXT ASS'Y:

SIGNATURES		DATE
DRAWN:	Flan	OCT-16-17
CHECKED:	Tod	OCT-16-17
ENGINEER:		
APPROVAL:	Tommy	OCT-16-17
CUSTOMER:		

THIS DRAWING IS SUPPLIED FOR INFORMATION ONLY. DESIGN FEATURES, SPECIFICATIONS AND PERFORMANCE DATA SHOWN HEREON ARE THE PROPERTY OF THE AMPHENOL CORPORATION. NO RIGHTS OF REPRODUCTION ARE IMPLIED. ALL DIMENSIONS ARE SUBJECT TO NORMAL MANUFACTURING VARIATIONS.

Amphenol
Sine Systems - www.amphenol-sine.com
44724 Morley Drive
Clinton Township, MI 48036

ECO-MATE,SOCKET CONTACT,
STAMPED, 4.0mm2, 2.5mm CONTACT

SIZE	TYPE	DWG NO:	REVISION
B	C-	SS12A1xx-10	A2

SCALE: NONE SHEET 1 OF 1

TITLE: ECO-MATE,SOCKET CONTACT, STAMPED,4.0mm2, 2.5mm
DWG NO: SS12A1xx-10
REV: A2
SH: 1
OF: 1