GENERAL TOLERANCE										USED ON
10 MAX	30 MAX	50 MAX	70 MAX	100 MAX	120 MAX	250 MAX	250 OVER	ANGLE	ECCENT	
±0.15	±0.20	±0.30	±0.40	±0.50	±0.75	±0.90	±1.4	±0.5°	0.1	

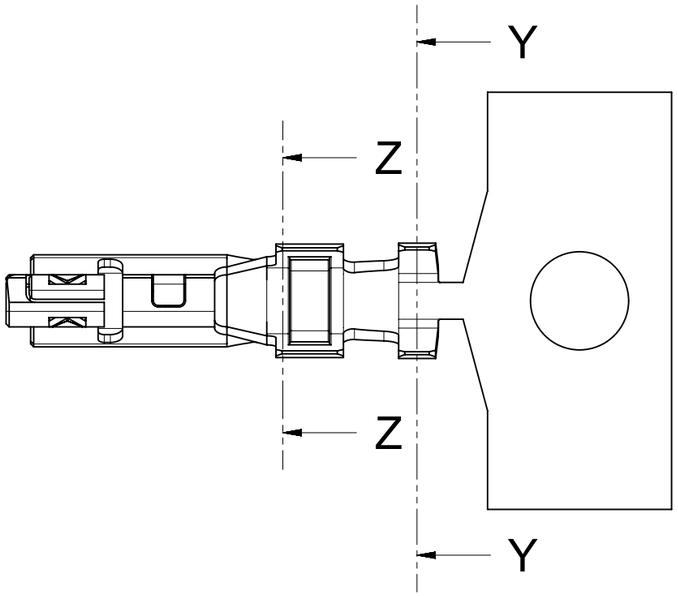

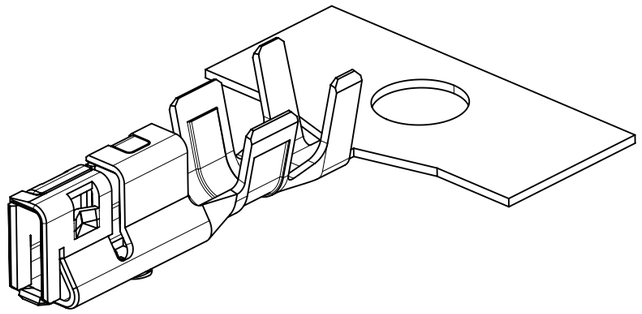

ISO VIEW

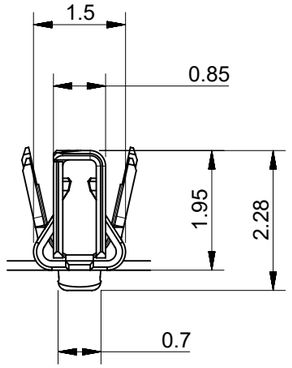

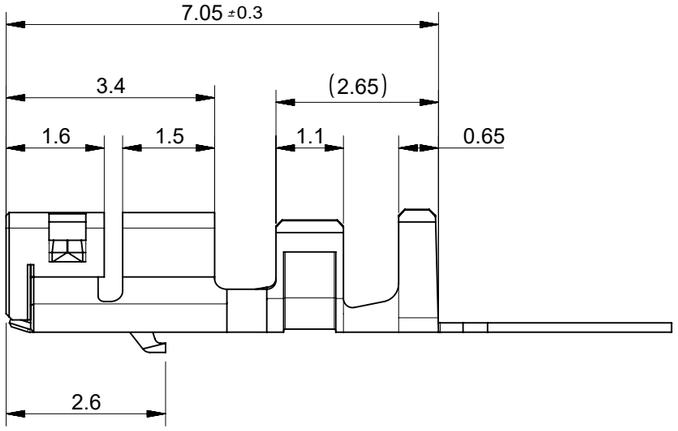

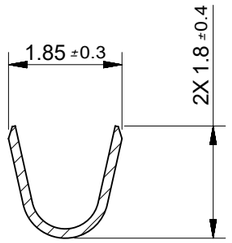

SECTION Z-Z

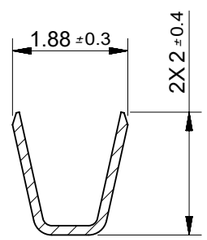

SECTION Y-Y

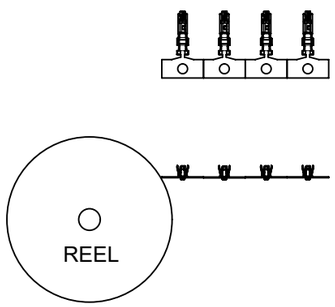

REEL DIRECTION

ORDER NO.	MATERIAL NO.
560124-0101	5601240101

NOTES:
1. MATERIALS : CORSON ALLOY, PRE-TIN, 0.15T
2. APPLICABLE HOUSING : 560123 SERIES
3. APPLICABLE WIRE : SEE CS-560124-001
4. GENERAL TOLERANCE : SEE TABLE
5. EVL AND RoHS COMPLIANT
6. PRODUCT SPECIFICATION : PS-560123-001,002,003
7. PACKING SPECIFICATION : PK-560124-001
8. CRIMP SPECIFICATION : CS-560124-001

THIS DRAWING CONTAINS INFORMATION THAT IS PROPRIETARY TO MOLEX ELECTRONIC TECHNOLOGIES, LLC AND SHOULD NOT BE USED WITHOUT WRITTEN PERMISSION

SYMBOLS	
E = 0	
F = 0	
G = 0	
S = 0	
▼ = 0	
C = 0	
☒ = 0	
■ = 0	
V = 0	

DIMENSION UNITS	SCALE
mm	10:1
GENERAL TOLERANCES (UNLESS SPECIFIED)	
ANGULAR TOL ± °	
4 PLACES	±
3 PLACES	±
2 PLACES	±
1 PLACE	±
0 PLACES	±
DRAFT WHERE APPLICABLE MUST REMAIN WITHIN DIMENSIONS	

CURRENT REV DESC:

EC NO: 629104
DRWN: SAKIM 2019/12/13
CHK'D: YKJUNG 2019/12/13
APPR: YKJUNG 2019/12/13

INITIAL REVISION:
DRWN: YIBAEK 2014/07/03
APPR: SRTAK 2014/08/26

THIRD ANGLE PROJECTION | DRAWING: A3-SIZE | SERIES: 560124

molex

NEW 2.0 W/B CRIMP REC
DURACLIK ISL SERIES

PRODUCT CUSTOMER DRAWING

DOCUMENT NUMBER	DOC TYPE	DOC PART	REVISION
SD-560124-001	PSD	001	A2

MATERIAL NUMBER	CUSTOMER	SHEET NUMBER
	GENERAL MARKET	1 OF 1

DOCUMENT STATUS	P1	RELEASE DATE	2019/12/13 04:33:54

FORMAT: master_molex_A3
REVISION: H
DATE: 2018/01/16