MATERIAL NUMBER	# OF COLUMNS	# OF DIFF PAIR	DIM "A" MAX	DIM "B"	PTH ø
76500-*8**	8	32	22.80	13.30	0.46±0.05
76500-*1**	10	40	26.60	17.10	0.46±0.05
76500-*6**	16	64	38.00	28.50	0.46±0.05
76500-*8**	8	32	22.80	13.30	0.39±0.05
76500-*1**	10	40	26.60	17.10	0.39±0.05
76500-*6**	16	64	38.00	28.50	0.39±0.05

76500-****

MODULE TYPE
3 = LEFT GUIDED, LEAD-FREE
7 = LEFT GUIDED, LEAD-FREE W/ ENDWALL

# OF COLUMNS
1 = 10 COLUMNS
6 = 16 COLUMNS
8 = 8 COLUMNS

PIN LENGTH (P)
4 = 4.90 (0.46 PTH)
5 = 5.50 (0.46 PTH)
7 = 4.90 (0.39 PTH)
8 = 5.50 (0.39 PTH)

KEY ORIENTATION
0 = NO KEY
1 = A 5 = E
2 = B 6 = F
3 = C 7 = G
4 = D 8 = H

NOTES:

1. MATERIALS: HOUSING - LIQUID CRYSTAL POLYMER (LCP). GLASS-FILLED, UL94V-0
   TERMINALS - HIGH PERFORMANCE COPPER ALLOY
2. FINISH: 30µIN SELECTIVE GOLD IN CONTACT AREA. SELECTIVE TIN ON PCB TAILS, NICKEL OVERALL.
3. REFER TO MOLEX PRODUCT SPECIFICATION PS-76060-999 FOR PERFORMANCE SPECIFICATIONS AND ADDITIONAL PCB INFORMATION.
4. EACH SIGNAL WAFER CONTAINS 2 COLUMNS OF TERMINALS.
5. PRODUCT IS PACKAGED PER PK-70873-041.
6. THIS PART CONFORMS TO CLASS B REQUIREMENTS OF COSMETIC SPEC PS-45499-002.
7. REFER TO MOLEX SALES DRAWING SD-76160-004 FOR THE MATING RECEPTACLES.
8. REFER TO MOLEX PCB ROUTING GUIDE AS-76060-990 FOR ANTIPAD AND ROUTING RECOMMENDATIONS.
9. WHEN USING MOLEX SUPPLIED #2-32 SCREW 73726-0000 (9.50mm ±0.38 THREADABLE SCREW LENGTH), THE MAXIMUM BOARD THICKNESS IS 4.4mm.
10. GUIDE LEFT RAM MATES TO GUIDE RIGHT DAUGHTERCARD.

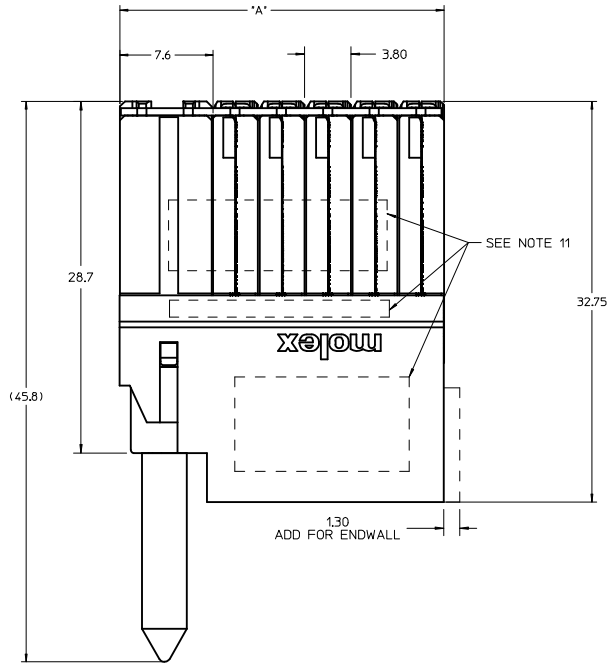

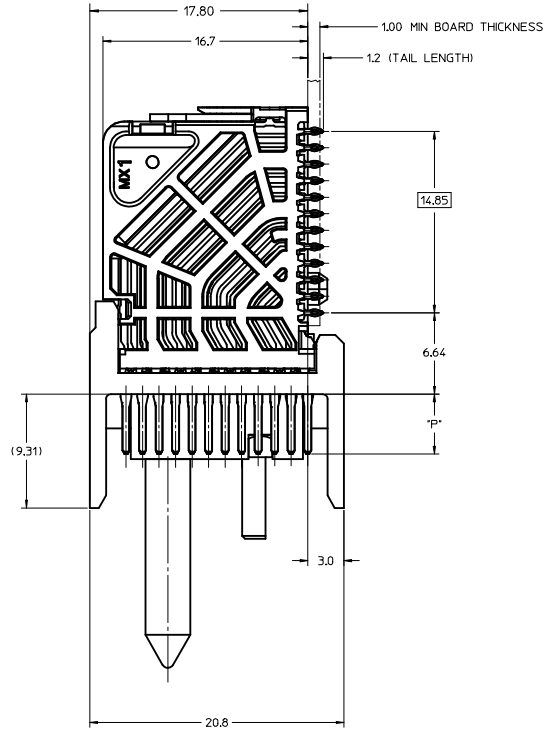

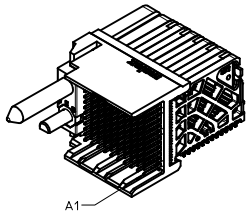

OPEN END OPTION

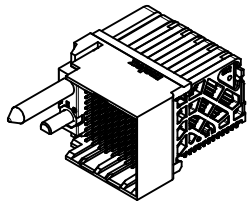

ENDWALL OPTION

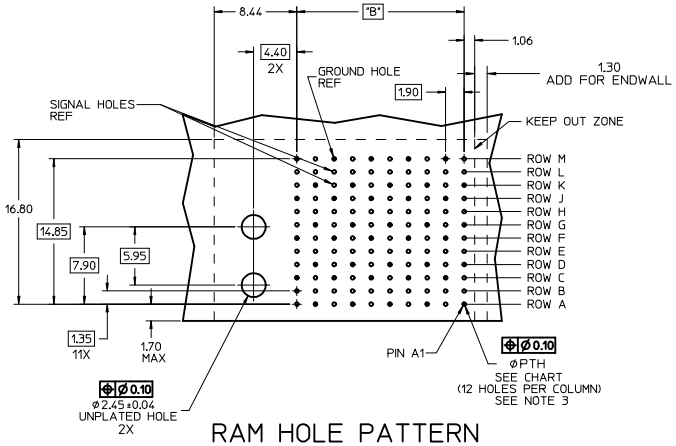

RAM HOLE PATTERN
(CONNECTOR SIDE)

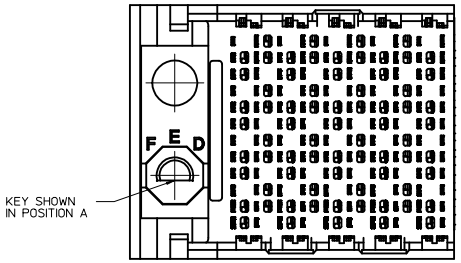

ADD LASER MARK INFO
EC NO: UCP2016-3973 2015/07/29
DRWN:DVARVARA 2016/02/22
CHKD:TELO 2016/04/20
APPR:TELO
DESCRIPTION
F3
REV

QUALITY SYMBOLS
=0
=0
=0
=0

GENERAL TOLERANCES (UNLESS SPECIFIED)

	mm	INCH
4 PLACES	± ---	± ---
3 PLACES	± ---	± ---
2 PLACES	± 0.13	± ---
1 PLACE	± 0.25	± ---
0 PLACE	± ---	± ---
ANGULAR ±1/2°		

DRAFT WHERE APPLICABLE MUST REMAIN WITHIN DIMENSIONS

DIMENSION STYLE: MM ONLY
SCALE: 5:1
DESIGN UNITS: METRIC
THIRD ANGLE PROJECTION

		DATE
DRAWN BY	JQUILES	2008/12/03
CHECKED BY	JLAURX	2008/12/04
APPROVED BY	JLAURX	2008/12/05

TITLE
IMPACT 4 PAIR RAM
GUIDE LEFT
SIGNAL MODULE SALES DWG

molex

MATERIAL NO.: SEE TABLE
DOCUMENT NO.: SD-76500-002
SHEET NO.: 1 OF 2
SIZE: D

THIS DRAWING CONTAINS INFORMATION THAT IS PROPRIETARY TO MOLEX INCORPORATED AND SHOULD NOT BE USED WITHOUT WRITTEN PERMISSION

COPLANAR APPLICATION

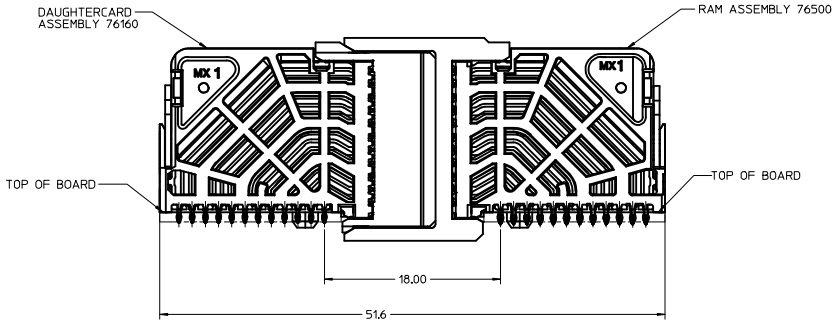

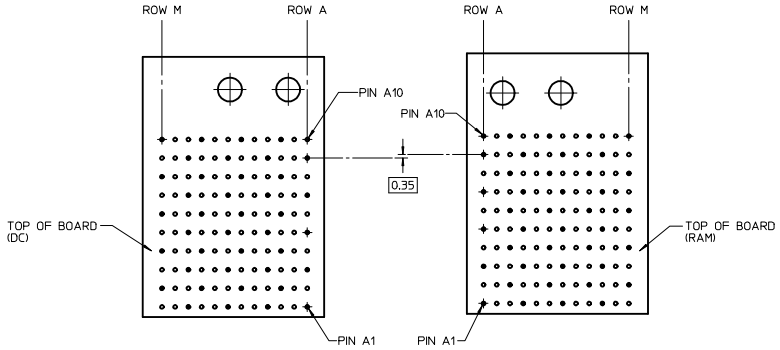

COPLANAR MATED SIGNAL PATHS

```
DC PIN A10----------RAM PIN A10
    |                   |
    |                   |
DC PIN A1-----------RAM PIN A1
```

SEE SHEET 1 EC NO: UCP2016-3973 DRWN:DIVARVARA 2015/07/29 CHKD:TELO 2016/02/22 APPR:TELO 2016/04/20 F3	REV	DESCRIPTION	QUALITY SYMBOLS =0 =0 =0	GENERAL TOLERANCES (UNLESS SPECIFIED) mm / INCH 4 PLACES ± --- / ± --- 3 PLACES ± --- / ± --- 2 PLACES ± 0.13 / ± --- 1 PLACE ± 0.25 / ± --- 0 PLACE ± --- / ± --- ANGULAR ±1/2° DRAFT WHERE APPLICABLE MUST REMAIN WITHIN DIMENSIONS	DIMENSION STYLE MM ONLY DRAWN BY JQUILES DATE 2008/12/03 CHECKED BY JLAURX DATE 2008/12/04 APPROVED BY JLAURX DATE 2008/12/05 MATERIAL NO. SEE TABLE	SCALE 4:1 DESIGN UNITS METRIC THIRD ANGLE PROJECTION TITLE IMPACT 4 PAIR RAM GUIDE LEFT SIGNAL MODULE SALES DWG molex DOCUMENT NO. SD-76500-002 SHEET NO. 2 OF 2 SIZE D	THIS DRAWING CONTAINS INFORMATION THAT IS PROPRIETARY TO MOLEX INCORPORATED AND SHOULD NOT BE USED WITHOUT WRITTEN PERMISSION																				

MATERIAL NUMBER	# OF COLUMNS	# OF DIFF PAIR	DIM "A" MAX	DIM "B"	PTH ø
76500-*8**	8	32	22.80	13.30	0.46±0.05
76500-*1**	10	40	26.60	17.10	0.46±0.05
76500-*6**	16	64	38.00	28.50	0.46±0.05
76500-*8**	8	32	22.80	13.30	0.39±0.05
76500-*1**	10	40	26.60	17.10	0.39±0.05
76500-*6**	16	64	38.00	28.50	0.39±0.05

76500-****

MODULE TYPE
3 = LEFT GUIDED, LEAD-FREE
7 = LEFT GUIDED, LEAD-FREE W/ ENDWALL

# OF COLUMNS
1 = 10 COLUMNS
6 = 16 COLUMNS
8 = 8 COLUMNS

PIN LENGTH (P)
4 = 4.90 (0.46 PTH)
5 = 5.50 (0.46 PTH)
7 = 4.90 (0.39 PTH)
8 = 5.50 (0.39 PTH)

KEY ORIENTATION
0 = NO KEY
1 = A 5 = E
2 = B 6 = F
3 = C 7 = G
4 = D 8 = H

NOTES:

1. MATERIALS: HOUSING - LIQUID CRYSTAL POLYMER (LCP). GLASS-FILLED, UL94V-0
   TERMINALS - HIGH PERFORMANCE COPPER ALLOY
2. FINISH: 30µIN SELECTIVE GOLD IN CONTACT AREA. SELECTIVE TIN ON PCB TAILS, NICKEL OVERALL.
3. REFER TO MOLEX PRODUCT SPECIFICATION PS-76060-999 FOR PERFORMANCE SPECIFICATIONS AND ADDITIONAL PCB INFORMATION.
4. EACH SIGNAL WAFER CONTAINS 2 COLUMNS OF TERMINALS.
5. PRODUCT IS PACKAGED PER PK-70873-041.
6. THIS PART CONFORMS TO CLASS B REQUIREMENTS OF COSMETIC SPEC PS-45499-002.
7. REFER TO MOLEX SALES DRAWING SD-76160-004 FOR THE MATING RECEPTACLES.
8. REFER TO MOLEX PCB ROUTING GUIDE AS-76060-990 FOR ANTIPAD AND ROUTING RECOMMENDATIONS.
9. WHEN USING MOLEX SUPPLIED #2-32 SCREW 73726-0000 (9.50mm ±0.38 THREADABLE SCREW LENGTH), THE MAXIMUM BOARD THICKNESS IS 4.4mm.
10. GUIDE LEFT RAM MATES TO GUIDE RIGHT DAUGHTERCARD.

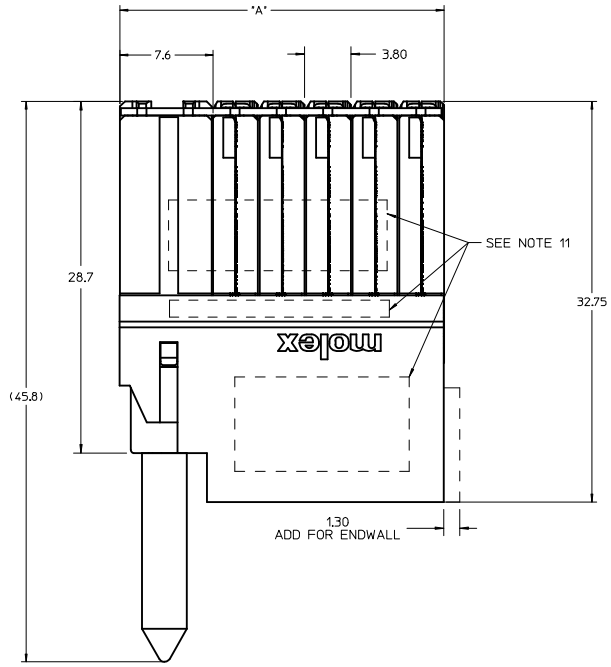

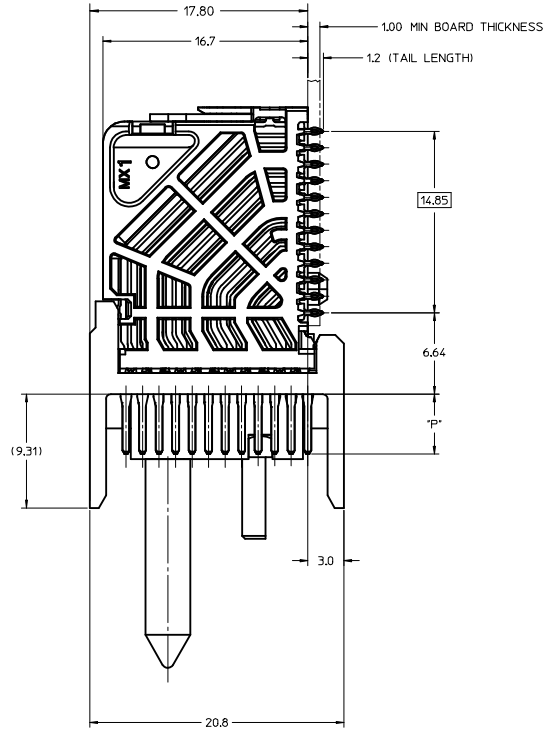

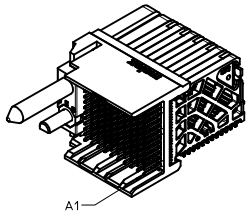

OPEN END OPTION

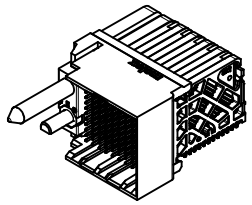

ENDWALL OPTION

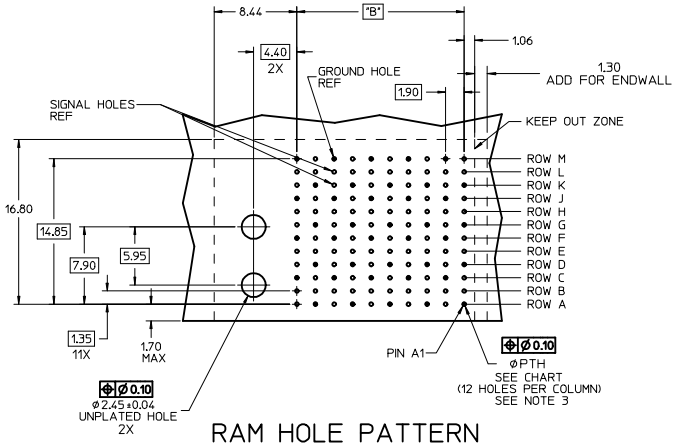

RAM HOLE PATTERN
(CONNECTOR SIDE)

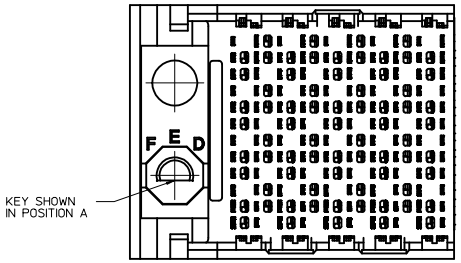

ADD LASER MARK INFO
EC NO: UCP2016-3973 2015/07/29
DRWN:DVARVARA 2016/02/22
CHKD:TELO 2016/04/20
APPR:TELO
DESCRIPTION
F3
REV

QUALITY SYMBOLS
=0
=0
=0
=0

GENERAL TOLERANCES (UNLESS SPECIFIED)

	mm	INCH
4 PLACES	± ---	± ---
3 PLACES	± ---	± ---
2 PLACES	± 0.13	± ---
1 PLACE	± 0.25	± ---
0 PLACE	± ---	± ---
ANGULAR ±1/2°		

DRAFT WHERE APPLICABLE MUST REMAIN WITHIN DIMENSIONS

DIMENSION STYLE: MM ONLY
SCALE: 5:1
DESIGN UNITS: METRIC
THIRD ANGLE PROJECTION

		DATE
DRAWN BY	JQUILES	2008/12/03
CHECKED BY	JLAURX	2008/12/04
APPROVED BY	JLAURX	2008/12/05

TITLE
IMPACT 4 PAIR RAM
GUIDE LEFT
SIGNAL MODULE SALES DWG

molex

MATERIAL NO.: SEE TABLE
DOCUMENT NO.: SD-76500-002
SHEET NO.: 1 OF 2
SIZE: D

THIS DRAWING CONTAINS INFORMATION THAT IS PROPRIETARY TO MOLEX INCORPORATED AND SHOULD NOT BE USED WITHOUT WRITTEN PERMISSION

COPLANAR APPLICATION

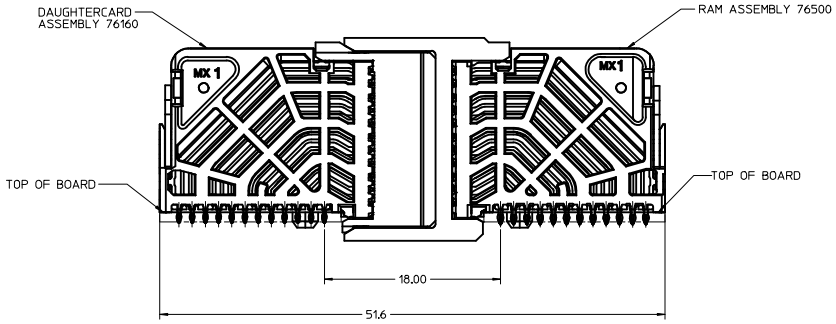

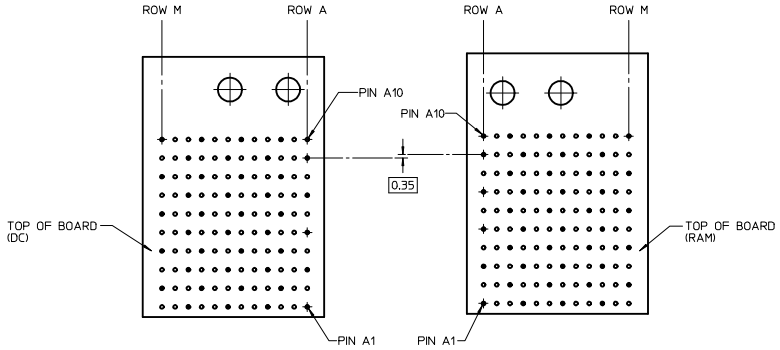

COPLANAR MATED SIGNAL PATHS

```
DC PIN A10----------RAM PIN A10
    |                   |
    |                   |
DC PIN A1-----------RAM PIN A1
```

SEE SHEET 1 EC NO: UCP2016-3973 DRWN:DIVARVARA 2015/07/29 CHKD:TELO 2016/02/22 APPR:TELO 2016/04/20 F3	REV	DESCRIPTION	QUALITY SYMBOLS =0 =0 =0	GENERAL TOLERANCES (UNLESS SPECIFIED) mm / INCH 4 PLACES ± --- / ± --- 3 PLACES ± --- / ± --- 2 PLACES ± 0.13 / ± --- 1 PLACE ± 0.25 / ± --- 0 PLACE ± --- / ± --- ANGULAR ±1/2° DRAFT WHERE APPLICABLE MUST REMAIN WITHIN DIMENSIONS	DIMENSION STYLE MM ONLY DRAWN BY JQUILES DATE 2008/12/03 CHECKED BY JLAURX DATE 2008/12/04 APPROVED BY JLAURX DATE 2008/12/05 MATERIAL NO. SEE TABLE	SCALE 4:1 DESIGN UNITS METRIC THIRD ANGLE PROJECTION TITLE IMPACT 4 PAIR RAM GUIDE LEFT SIGNAL MODULE SALES DWG molex DOCUMENT NO. SD-76500-002 SHEET NO. 2 OF 2 SIZE D	THIS DRAWING CONTAINS INFORMATION THAT IS PROPRIETARY TO MOLEX INCORPORATED AND SHOULD NOT BE USED WITHOUT WRITTEN PERMISSION																				