SERPAC Electronic Enclosures

CA10B6 (6 button option)

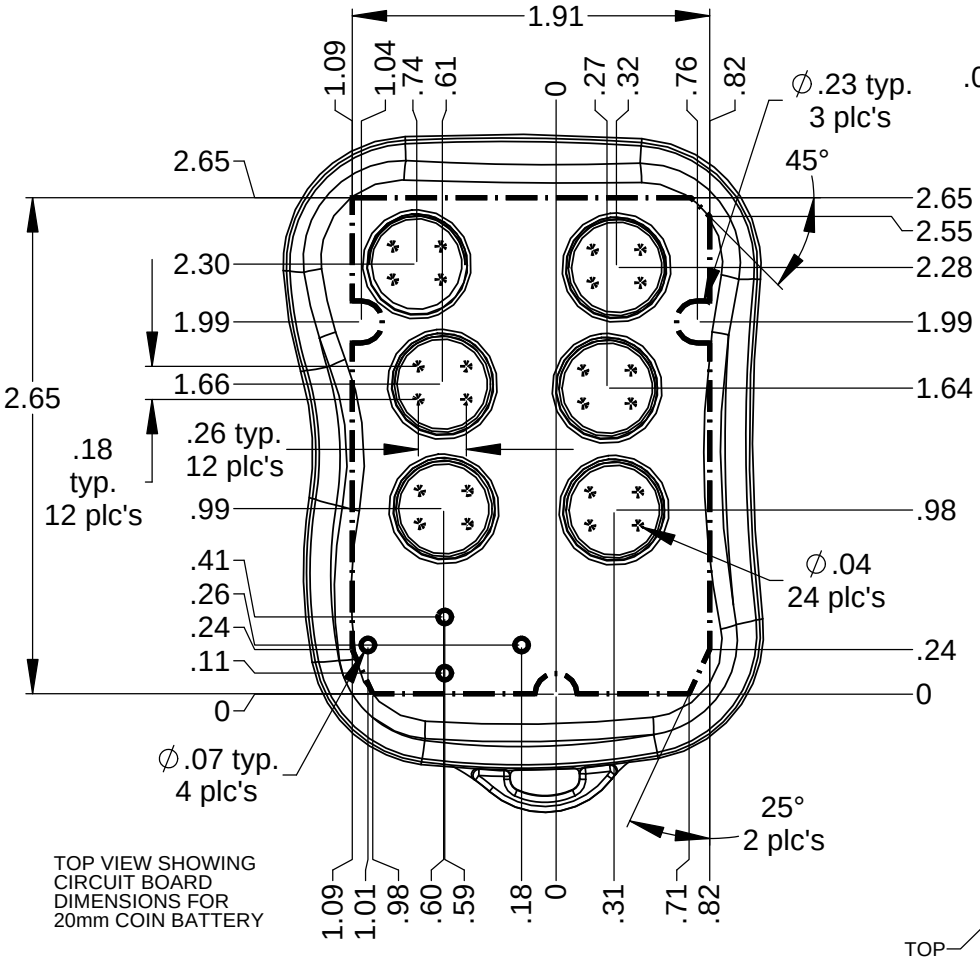

TOP VIEW SHOWING
CIRCUIT BOARD
DIMENSIONS FOR
20mm COIN BATTERY

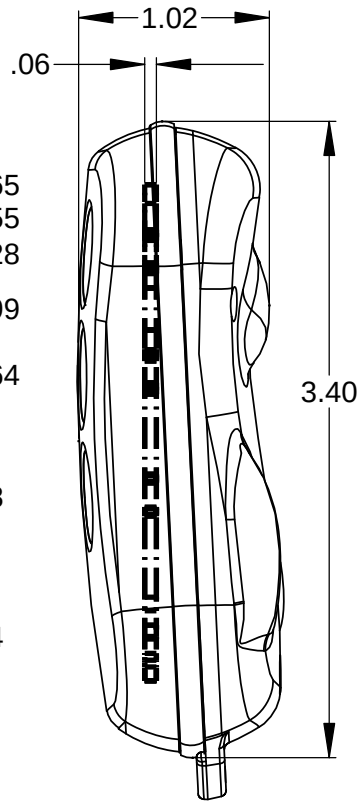

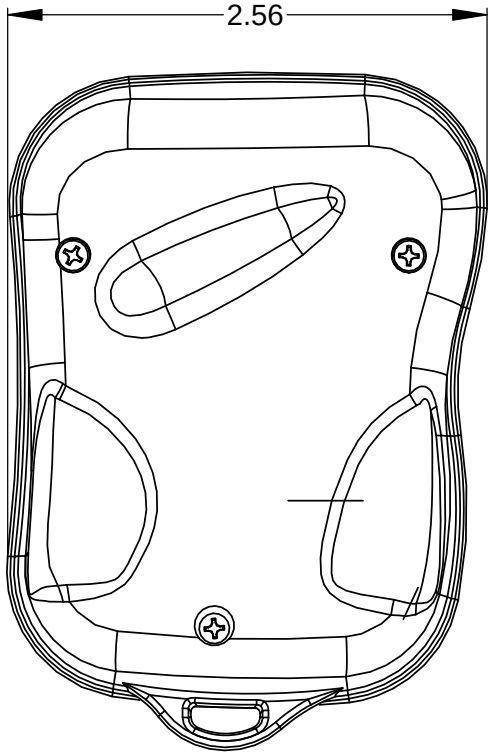

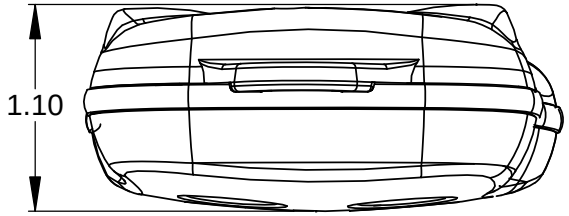

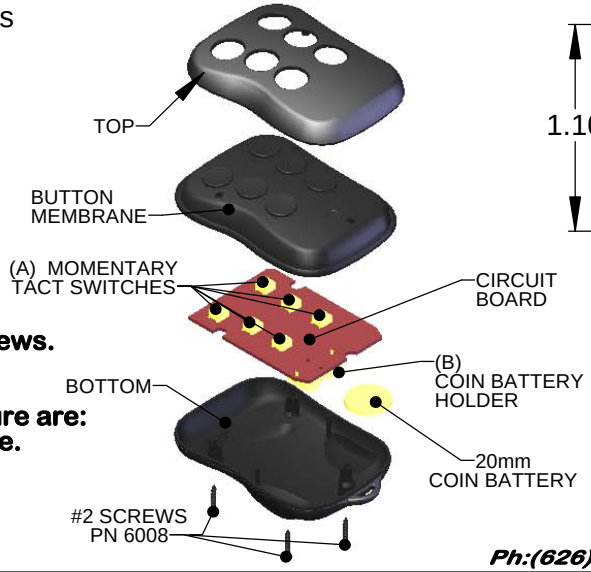

NOTES:

1) Serpac Provides the following components:
Top, Bottom, Button Membrane, 9mm keyring and (2) #2 Screws.
All components are shipped unassembled.

2) The switches characteristics recommended for this enclosure are:
- 4.3 mm in height from mounting surface to top of push plate.
- Operating force recommended is 1.6 N or more.

3) For battery contacts use:
- for Coin battery Keystone 3003 positive and 2990 negative

ALL DIMENSIONS ARE ± .010" ***6/26/2013***

2009 Wright Ave, La Verne, CA 91750
Ph:(626) 331-0517 Fx: (626) 331-8584 www.serpac.com

SERPAC Electronic Enclosures CA10B6 (6 button, AAA option)

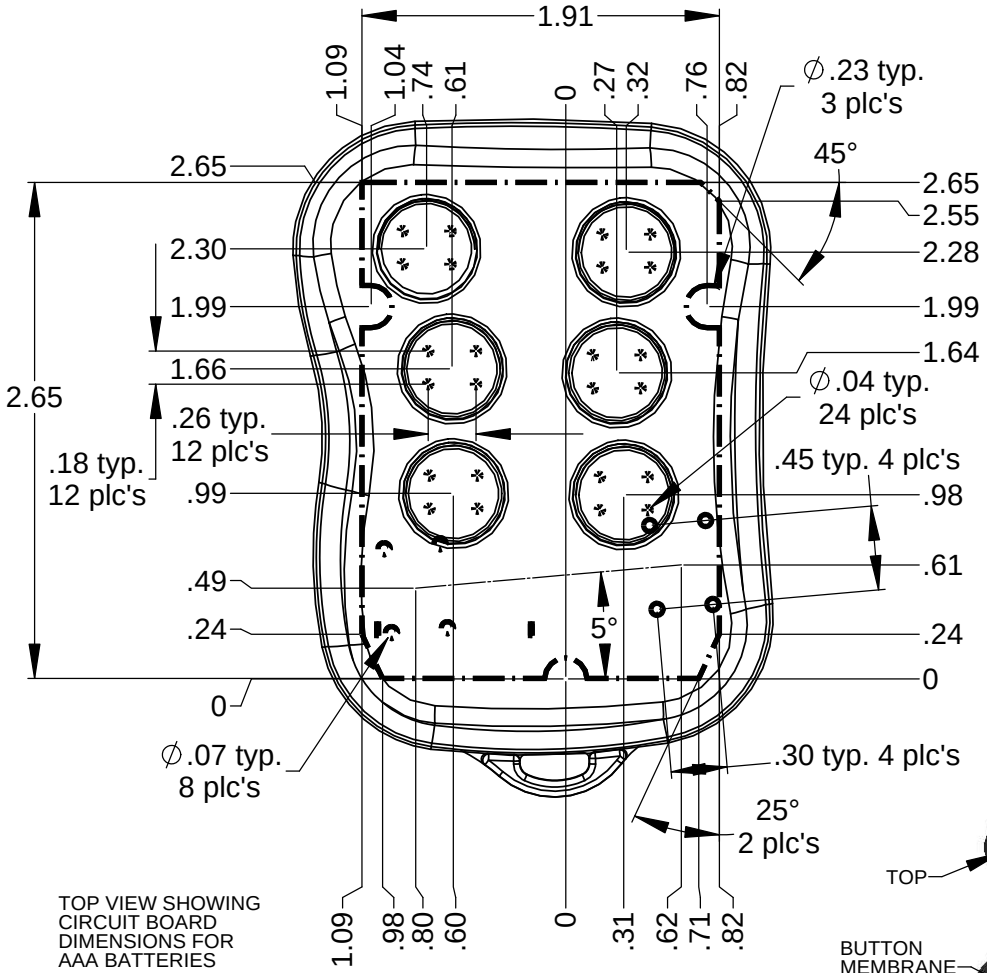

TOP VIEW SHOWING CIRCUIT BOARD DIMENSIONS FOR AAA BATTERIES

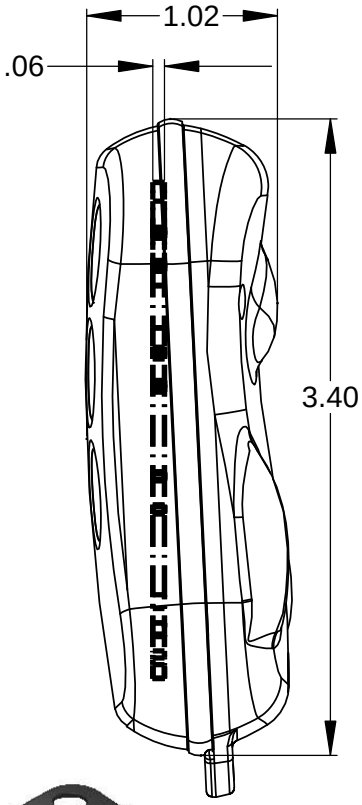

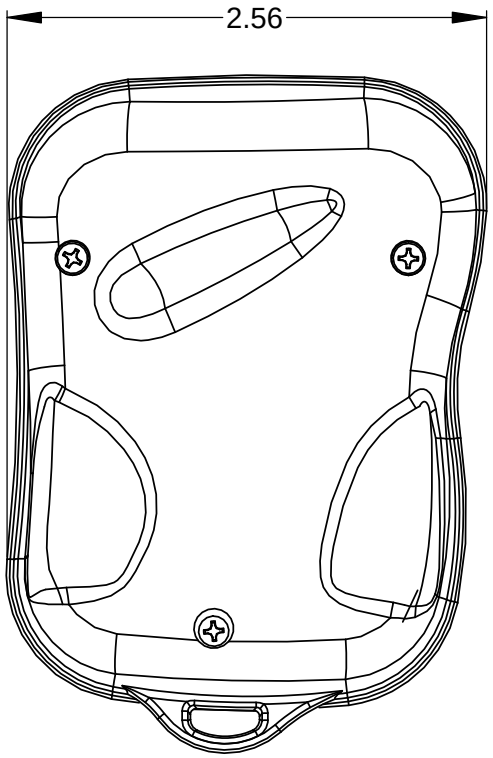

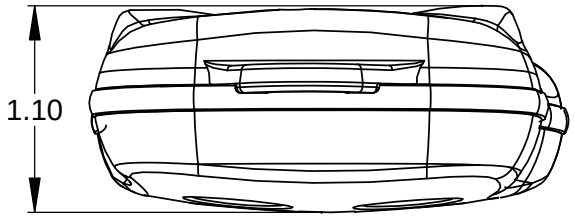

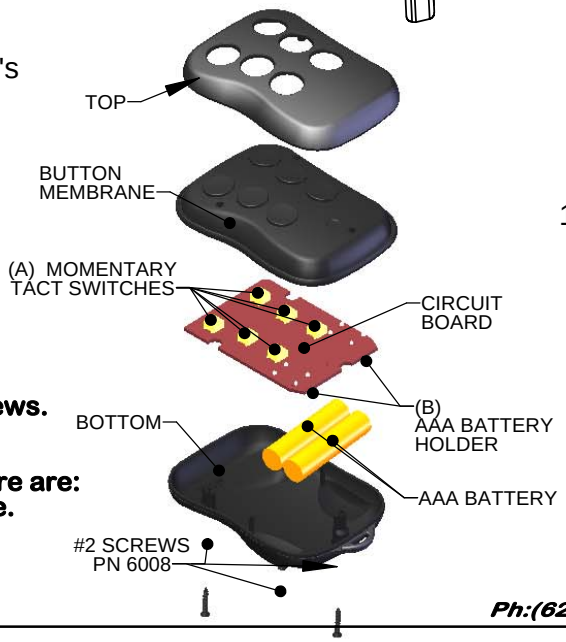

NOTES:

1) Serpac Provides the following components:
Top, Bottom, Button Membrane, 9mm keyring and (2) #2 Screws.
All components are shipped unassembled.

2) The switches characteristics recommended for this enclosure are:
- 4.3 mm in height from mounting surface to top of push plate.
- Operating force recommended is 1.6 N or more.

3) For battery contacts use:
- for (2) AAA Batteries use Keystone 82 (2 per battery)

ALL DIMENSIONS ARE ± .010" ***6/26/2013***

2009 Wright Ave, La Verne, CA 91750
Ph:(626) 331-0517 Fx: (626) 331-8584 www.serpac.com